Vermont Gage

BRINGING YOU THE

QUALITY YOU DESERVE

SINCE 1980

2025 PRODUCT CATALOG

Vermont Gage

A Division of Vermont Precision Tools, Inc.

QUALITY POLICY

Our quality policy is to consistently attain or exceed customer satisfaction by providing products and services that meet all agreed upon specifications, timely delivery and responsive customer service.

This will be achieved through:

- Aligning the Quality Management System with the strategic direction of Vermont Precision Tools
- Satisfying customer's applicable statutory and regulatory requirements while striving for continual improvement
- Management of organization, along with employee-established quality objectives and defined responsibilities for their fulfillment
- Establishing, applying, maintaining and continual improvement of effectiveness of Quality Management System – ISO 9001:2015
- Utilize new technologies and educate employees to onboard and apply new technology to improve processes
- Careful selection of suppliers
- Commitment to quality in every aspect of business processes
- Making continuous improvement a part of every day and every job
- Ensuring that our Policy and Procedure Manuals reflect what we actually do
- Understanding how our jobs fit into the overall flow of work at Vermont Precision Tools
- Provide training, support, and resources to all employees to ensure they are able to fulfill their responsibilities in meeting the Quality Policy and its objectives

The framework for setting quality objectives is defined in the Quality Manual.

Vermont Precision Tools Management Representative and Management Team are responsible for communicating the Quality Policy to all persons working for or on behalf of the organization.

Personnel within the organization are trusted to comply with the company's ISO 9001 Quality Policy at all times.

This policy is implemented at the Swanton, Vermont facility through the company's ISO 9001 quality management system which covers the manufacture of fixed limit gages and tool blanks.

SINCERELY,
VERMONT PRECISION TOOLS INC.

MONICA A. GREENE
PRESIDENT AND CEO

ISO 9001 CERTIFICATION intertek

ANAB ANSI National Accreditation Board ACCREDITED MANAGEMENT SYSTEMS CERTIFICATION BODY

ilac-MRA

ACCREDITED

Table of Contents

PLAIN PLUG GAGES

Class ZZ Standards *(Steel or Black Guard™)* 2-7
Class X Standards *(Stocked in Steel)* 8-9
Custom Gage Sets *(Over / Under Sets)* 10-11
Custom Reversibles *(Class XX, X, Y, Z or ZZ Plugs available in Steel, Black Guard™ , Chrome or Carbide)*
- **Standard Length** *(2" long)* 12-15
- **Step Gage** *(2" long, Steel or Black Guard™)* 16-17
- **Long Length** *(Up to 12" long)* 18-19

Custom Taperlocks *(Class XX, X, Y, Z or ZZ Plugs available in Steel, Black Guard™ or Chrome)* 20-21
Custom Trilocks *(Class XX, X, Y, Z or ZZ Plugs available in Steel, Black Guard™ or Chrome)* 22-23
Custom Progressives *(Class X, Y, Z or ZZ Plugs available in Steel, Black Guard™ or Chrome)* 24-25
Custom Hex Gages *(ASME B107.17M and ASME B18.3)* 26-27

PLAIN RING GAGES

Custom Rings *(Class XX, X, Y, Z or ZZ Rings available in Steel, Chrome or Carbide)* 28-31

MASTERS

Custom Setting Discs *(Class XX, X or Y Discs available in Steel or Chrome)* 32-34

HOLE LOCATION GAGES

Flexible Hole Location Gages *(Inch and Metric)* 35

THREAD GAGES

Standard Taperlocks *(Class X Plugs stocked in Chrome)* 36-81
Standard Reversibles *(Class X Plugs stocked in Chrome)*
Standard STI (Screw Thread Insert) *(Class X Plugs stocked in Chrome, available in Tool Steel)*
Standard Rings *(Class X Rings stocked in Tool Steel, available in Chrome)*
Standard Setting Plugs *(Class X Set Plugs stocked in Tool Steel)*
Thread Measuring Wires *(60° Wires stocked in Tool Steel)* 82-84
Gear Measuring Wires *(1.92", 1.728", 1.68" or 1.44" Series)* 85
Standard Pipe Plugs *(Taper Pipe Plugs stocked in Tool Steel, Straight Pipe Plugs in Chrome)* 86-87
Standard Pipe Rings *(Taper Pipe Rings stocked in Tool Steel, Straight Pipe Rings in Tool Steel)* 88-89

BLANKS

Standard HSS Jobber Length/Long Length *(Drill and Reamer Blanks stocked)* 90-96
Standard Cobalt Jobber Length *(Drill Blanks stocked in inch sizes)* 97
Custom Straight Blanks *(Available in HSS, M-42 quoted upon request)* 98-101

ACCESSORIES

Gage Handles, Holders, Bushings, Boxes & Inserts 102-105

SERVICES

Calibrations *(Calibration Certificates, 17025 Accredited Calibration Certificates)* 106-111
Measurement Conflict Resolution *(As per AMTMA whitepaper)* 112
Depth Notches, Pressure Relief Flats & Diamond / Blade NO-GO Gages *(Available on plug gages)* 113
Gage Use, Helpful Hints & Fact Sheet *(Gagemakers Tolerance Chart)* 114-116

Thank you for choosing Vermont Gage

Print Date 03/2025

Standard Class ZZ Sets

ECONOMICAL GENERAL PURPOSE PIN GAGES

Make quick and accurate measurements with Vermont Gage Pin Gages. Measure hole sizes. Calculate distances between holes. Gage slot widths. Check locations. Use for Go/ NoGo gaging. Size in micrometers and snap gages. These economical gages give you added wear life, unlike closer tolerance gages available on the market today.

- ***Class ZZ (.0002" or .005mm tolerance)***
- ***Go (Plus) or NoGo (Minus)***
- ***Available in Steel or Black Guard™***
- ***NIST traceable***
- ***.0005"or .02mm sizes***
- ***.001" or .02mm set increments***
- ***Tool Steel; 60/65 Rc***
- ***2" long***
- ***10 microinch finish or better***
- ***Round within .0001" or .0025mm***
- ***Marked with size and direction of tolerance on gages over .0605"***
- ***Certificate of Accuracy included***
- ***See pages 106-107 for Calibration Services***

Standard Class ZZ Sets

			Steel		Black Guard ™		
Range	No. of Gages	Wt. lbs.	**Part No. (Plus) Steel**	**Part No. (Minus) Steel**	**Part No. (Plus) Black Guard**	**Part No. (Minus) Black Guard**	Price
Inch Sets (.001" increments)							
.0060" to .0600"	55	2	**101100100**	**101200100**	**901100100**	**901200100**	$140.00
.0065" to .0605"	55	2	**101300100**	**101400100**	**901300100**	**901400100**	$140.00
.0110" to .0600"	50	2	**101100200**	**101200200**	**901100200**	**901200200**	$110.00
.0115" to .0605"	50	2	**101300200**	**101400200**	**901300200**	**901400200**	$110.00
.0110" to .2500"	240	6	**101100300**	**101200300**	**901100300**	**901200300**	$315.00
.0115" to .2505"	240	6	**101300300**	**101400300**	**901300300**	**901400300**	$315.00
.0610" to .2500"	190	6	**101100400**	**101200400**	**901100400**	**901200400**	$225.00
.0615" to .2505"	190	6	**101300400**	**101400400**	**901300400**	**901400400**	$225.00
.2510" to .5000"	250	20	**101100500**	**101200500**	**901100500**	**901200500**	$335.00
.2515" to .5005"	250	20	**101300500**	**101400500**	**901300500**	**901400500**	$335.00
.5010" to .6250"	125	21	**101100600**	**101200600**	**901100600**	**901200600**	$410.00
.5015" to .6255"	125	21	**101300600**	**101400600**	**901300600**	**901400600**	$410.00
.6260" to .7500"	125	31	**101100700**	**101200700**	**901100700**	**901200700**	$430.00
.6265" to .7505"	125	31	**101300700**	**101400700**	**901300700**	**901400700**	$430.00
.7510" to .8320"	82	27	**101100800**	**101200800**	**901100800**	**901200800**	$750.00
.7515" to .8325"	82	27	**101300800**	**101400800**	**901300800**	**901400800**	$750.00
.8330" to .9160"	84	33	**101100900**	**101200900**	**901100900**	**901200900**	$880.00
.8335" to .9165"	84	33	**101300900**	**101400900**	**901300900**	**901400900**	$880.00
.9170" to 1.0000"	84	38	**101101000**	**101201000**	**901101000**	**901201000**	$915.00
.9175" to 1.0005"	84	38	**101301000**	**101401000**	**901301000**	**901401000**	$915.00
Metric Sets (.02mm increments)							
0.20mm to 1.28mm	55	2	**102100100**	**102200100**	**902100100**	**902200100**	$125.00
0.21mm to 1.29mm	55	2	**102300100**	**102400100**	**902300100**	**902400100**	$125.00
1.30mm to 4.98mm	185	6	**102100200**	**102200200**	**902100200**	**902200200**	$270.00
1.31mm to 4.99mm	185	6	**102300200**	**102400200**	**902300200**	**902400200**	$270.00
5.00mm to 9.98mm	250	14	**102100300**	**102200300**	**902100300**	**902200300**	$420.00
5.01mm to 9.99mm	250	14	**102300300**	**102400300**	**902300300**	**902400300**	$420.00
10.00mm to 13.98mm	200	24	**102100400**	**102200400**	**902100400**	**902200400**	$365.00
10.01mm to 13.99mm	200	24	**102300400**	**102400400**	**902300400**	**902400400**	$365.00
14.00mm to 16.48mm	125	24	**102100500**	**102200500**	**902100500**	**902200500**	$465.00
14.01mm to 16.49mm	125	24	**102300500**	**102400500**	**902300500**	**902400500**	$465.00
16.50mm to 18.98mm	125	30	**102100600**	**102200600**	**902100600**	**902200600**	$600.00
16.51mm to 18.99mm	125	30	**102300600**	**102400600**	**902300600**	**902400600**	$600.00
19.00mm to 20.98mm	100	32	**102100700**	**102200700**	**902100700**	**902200700**	$1,025.00
19.01mm to 20.99mm	100	32	**102300700**	**102400700**	**902300700**	**902400700**	$1,025.00
21.00mm to 22.48mm	75	29	**102100800**	**102200800**	**902100800**	**902200800**	$880.00
21.01mm to 22.49mm	75	29	**102300800**	**102400800**	**902300800**	**902400800**	$880.00
22.50mm to 23.98mm	75	33	**102100900**	**102200900**	**902100900**	**902200900**	$915.00
22.51mm to 23.99mm	75	33	**102300900**	**102400900**	**902300900**	**902400900**	$915.00
24.00mm to 25.48mm	75	36	**102101000**	**102201000**	**902101000**	**902201000**	$960.00
24.01mm to 25.49mm	75	36	**102301000**	**102401000**	**902301000**	**902401000**	$960.00

Vermont Gage offers

Calibration Services

for new and used sets and libraries.

See Pages 106-107 for details!

Standard Class ZZ Libraries

ECONOMICAL GENERAL PURPOSE PIN GAGES

Make quick and accurate measurements with Vermont Gage Pin Gages. Measure hole sizes. Calculate distances between holes. Gage slot widths. Check locations. Use for Go/NoGo gaging. Size in micrometers and snap gages. These economical gages give you added wear life, unlike closer tolerance gages available on the market today.

- ***Class ZZ (.0002" or .005mm tolerance)***
- ***Go (Plus) or NoGo (Minus)***
- ***Available in Steel or Black Guard™***
- ***NIST traceable***
- ***.0005" or .01mm sizes***
- ***.001" or .02mm set increments***
- ***Tool Steel; 60/65 Rc***
- ***2" long***
- ***10 microinch finish or better***
- ***Round within .0001" or .0025mm***
- ***Marked with size and direction of tolerance on gages over .0605"***
- ***Additional library configurations available upon request***
- ***Certificate of Accuracy included***
- ***See pages 106-107 for Calibration Services***

Standard Class ZZ Libraries

Range	No. of Gages	Wt. lbs.	No. of Drawers	Steel: Part No. (Plus) Steel	Steel: Part No. (Minus) Steel	Black Guard ™: Part No. (Plus) Black Guard	Black Guard ™: Part No. (Minus) Black Guard	Price
Inch Libraries (.001" increments)								
.0060" to .6250"	620	89	4	**101101100**	**101201100**	**901101100**	**901201100**	$1,415.00
.0065" to .6255"	620	89	4	**101301100**	**101401100**	**901301100**	**901401100**	$1,415.00
.0060" to .8320"	827	187	6	**101101150**	**101201150**	**901101150**	**901201150**	$2,670.00
.0065" to .8325"	827	187	6	**101301150**	**101401150**	**901301150**	**901401150**	$2,670.00
.0060" to 1.0000"	995	256	8	**101101200**	**101201200**	**901101200**	**901201200**	$4,515.00
.0065" to 1.0005"	995	256	8	**101301200**	**101401200**	**901301200**	**901401200**	$4,515.00
.0110" to .6255" **	1230	202	6	**101102150**	**101202150**	**901102150**	**901202150**	$2,595.00
.0110 to .6250"	615	120	4*	**101101300**	**101201300**	**901101300**	**901201300**	$1,375.00
.0115" to .6255"	615	120	4*	**101301300**	**101401300**	**901301300**	**901401300**	$1,375.00
.0110" to .7500"	740	118	4	**101101400**	**101201400**	**901101400**	**901201400**	$1,815.00
.0115" to .7505"	740	118	4	**101301400**	**101401400**	**901301400**	**901401400**	$1,815.00
.0110" to .9160"	906	192	6	**101101450**	**101201450**	**901101450**	**901201450**	$3,460.00
.0115" to .9165"	906	192	6	**101301450**	**101401450**	**901301450**	**901401450**	$3,460.00
.0110" to 1.0000"	990	256	8*	**101101500**	**101201500**	**901101500**	**901201500**	$4,480.00
.0115" to 1.0005"	990	256	8*	**101301500**	**101401500**	**901301500**	**901401500**	$4,480.00
.0610" to .5005" **	880	120	4	**101102200**	**101202200**	**901102200**	**901202200**	$1,415.00
.0610" to .7500"	690	118	4	**101101600**	**101201600**	**901101600**	**901201600**	$1,690.00
.0615" to .7505"	690	118	4	**101301600**	**101401600**	**901301600**	**901401600**	$1,690.00
.0610" to .9160"	856	218	6	**101101650**	**101201650**	**901101650**	**901201650**	$3,385.00
.0615" to .9165"	856	218	6	**101301650**	**101401650**	**901301650**	**901401650**	$3,385.00
.0610" to 1.0000"	940	256	8*	**101101700**	**101201700**	**901101700**	**901201700**	$4,365.00
.0615" to 1.0005"	940	256	8*	**101301700**	**101401700**	**901301700**	**901401700**	$4,365.00
.5010" to 1.0000"	500	150	6*	**101101950**	**101201950**	**901101950**	**901201950**	$3,740.00
.5015" to 1.0005"	500	150	6*	**101301950**	**101401950**	**901301950**	**901401950**	$3,740.00
.6260" to 1.0000"	375	129	4	**101102000**	**101202000**	**901102000**	**901202000**	$3,265.00
.6265" to 1.0005"	375	129	4	**101302000**	**101402000**	**901302000**	**901402000**	$3,265.00
.7510" to 1.0000"	250	98	4*	**101102050**	**101202050**	**901102050**	**901202050**	$2,830.00
.7515" to 1.0005"	250	98	4*	**101302050**	**101402050**	**901302050**	**901402050**	$2,830.00
Metric Libraries (.02mm increments)								
0.20mm to 13.98mm	690	86	4	**102101100**	**102201100**	**902101100**	**902201100**	$1,470.00
0.21mm to 13.99mm	690	86	4	**102301100**	**102401100**	**902301100**	**902401100**	$1,470.00
0.20mm to 18.98mm	940	154	6	**102101150**	**102201150**	**902101150**	**902201150**	$2,510.00
0.21mm to 18.99mm	940	154	6	**102301150**	**102201150**	**902101150**	**902201150**	$2,510.00
0.20mm to 22.48mm	1115	241	8	**102101200**	**102201200**	**902101200**	**902201200**	$4,640.00
0.21mm to 22.49mm	1115	241	8	**102301200**	**102401200**	**902301200**	**902401200**	$4,640.00
0.20mm to 25.48mm	1265	322	10	**102101250**	**102201250**	**902101250**	**902201250**	$6,755.00
0.21mm to 25.49mm	1265	322	10	**102301250**	**102401250**	**902301250**	**902401250**	$6,755.00
1.30mm to 16.48mm	760	108	4	**102101300**	**102201300**	**902101300**	**902201300**	$1,970.00
1.31mm to 16.49mm	760	108	4	**102301300**	**102401300**	**902301300**	**902401300**	$1,970.00
1.30mm to 20.98mm	985	184	6	**102101350**	**102201350**	**902101350**	**902201350**	$3,300.00
1.31mm to 20.99mm	985	184	6	**102301350**	**102401350**	**902301350**	**902401350**	$3,300.00
1.30mm to 23.98mm	1135	268	8*	**102101400**	**102201400**	**902101400**	**902201400**	$5,740.00
1.31mm to 23.99mm	1135	268	8*	**102301400**	**102401400**	**902301400**	**902401400**	$5,740.00
1.30mm to 25.48mm	1210	322	10*	**102101450**	**102201450**	**902101450**	**902201450**	$6,275.00
1.31mm to 25.49mm	1210	322	10*	**102301450**	**102401450**	**902301450**	**902401450**	$6,275.00

***Indicates 1 empty drawer **Indicates .0005 increments**

Standard Class ZZ Replacement Pins

KEEP OLD SETS IN COMPLIANCE!

These economical gages give you added wear life, unlike closer tolerance gages available on the market today. These replacement pins are perfect for updating your old sets and bringing them back into compliance. Each pin is marked with its size and direction of tolerance, and are individually packaged. Each pin is NIST traceable and includes a Certificate of Accuracy printed on the package.

- ***Class ZZ (.0002" or .005mm tolerance)***
- ***Go (Plus) or NoGo (Minus)***
- ***Available in Steel or Black Guard™***
- ***NIST traceable***
- ***.0005" or .01mm sizes***
- ***Tool Steel; 60/65 Rc***
- ***2" long***
- ***10 microinch finish or better***
- ***Round within .0001" or .0025mm***
- ***Marked with size and direction of tolerance on gages over .0605"***
- ***Certificate of Accuracy included***
- ***See page 109 for Calibration Services***

How to Order:

_ 1 _ _ _____ 0

Finish
[1] Steel
[9] Black Guard™

Scale
[1] Inch
[2] Metric

Direction of Tolerance
[1] Plus (even or whole sizes)
[2] Minus (even or whole sizes)
[3] Plus (odd or half sizes)
[4] Minus (odd or half sizes)

Size (Specify size of gage)
[xxxx]
Examples:
.2500" Plus pin gage = 111125000
.2505" Minus pin gage = 111425050
12.02mm Minus pin gage = 112212020
12.03mm Plus pin gage = 112312030

Range	Price
Inch	
.0040" to .0105"	$8.75
.0110" to .0605"	$4.25
.0610" to .5005"	$4.00
.5010" to .6255"	$5.00
.6260" to .7505"	$7.50
.7510" to .8325"	$10.50
.8330" to .9165"	$12.00
.9170" to 1.0005"	$12.50
Metric	
0.20mm to 1.29mm	$5.25
1.30mm to 9.99mm	$4.50
10.00mm to 13.99mm	$5.75
14.00mm to 16.49mm	$7.50
16.50mm to 18.99mm	$8.50
19.00mm to 20.99mm	$10.75
21.00mm to 22.49mm	$12.50
22.50mm to 23.99mm	$13.75
24.00mm to 25.50mm	$15.00

Standard Class ZZ Go/NoGo Assemblies

A GREAT GO/NOGO INSPECTION TOOL

Class ZZ assemblies are economical and versatile for Go/NoGo gaging. If the Go (green end) fits and the NoGo (red end) does not, your part passes inspection. It does not get any easier! Each assembly includes 1 line (up to 25 characters) of custom marking.

Range	Single-End Assembly	Double-End Assembly
Inch		
.0040" to .0105"	$22.75	$36.25
.0110" to .0755"	$18.25	$27.25
.0760" to .1805"	$18.00	$26.75
.1810" to .2815"	$20.00	$28.75
.2820" to .4065"	$21.00	$29.50
.4070" to .5005"	$24.00	$33.00
.5010" to .6255"	$29.50	$41.00
.6260" to .7505"	$34.00	$48.00
.7510" to .8325"	$46.00	$63.00
.8330" to .9165"	$47.50	$66.00
.9170" to 1.005"	$48.00	$67.00
Metric		
0.20mm to 1.29mm	$19.25	$29.25
1.30mm to 4.56mm	$18.50	$27.75
4.57mm to 7.14mm	$20.50	$29.75
7.15mm to 9.99mm	$21.50	$30.50
10.00mm to 12.94mm	$25.75	$36.50
12.95mm to 16.12mm	$32.00	$46.00
16.13mm to 18.99mm	$36.00	$50.00
19.00mm to 19.30mm	$37.25	$54.50
19.31mm to 22.49mm	$48.00	$67.00
22.50mm to 23.99mm	$49.25	$69.50
24.00mm to 25.50mm	$50.50	$72.00

Use larger diameter to determine proper range.

How to Order:

_ 3 _ 1 _ _ _ 0

Finish
[1] Steel
[9] Black Guard™

Scale
[1] Inch
[2] Metric

Range

[01] .0040" to .0105"	[0.20mm to 1.29mm]
[02] .0110" to .0755"	[1.30mm to 4.56mm]
[03] .0760" to .1805"	[4.57mm to 7.14mm]
[04] .1810" to .2815"	[7.15mm to 9.99mm]
[05] .2820" to .4065"	[10.00mm to 12.94mm]
[06] .4070" to .5005"	[12.95mm to 16.12mm]
[07] .5010" to .6255"	[16.13mm to 18.99mm]
[08] .6260" to .7505"	[19.00mm to 19.30mm]
[09] .7510" to .8325"	[19.31mm to 22.49mm]
[10] .8330" to .9165"	[22.50mm to 23.99mm]
[11] .9170" to 1.0005"	[24.00mm to 25.50mm]

Direction of Tolerance
[1] Go [1 member, (Plus) unilateral tolerance]
[2] NoGo [1 member, (Minus) unilateral tolerance]
[3] Go/NoGo [2 members, (1) Plus, (1) Minus tolerance]

Package
[1] Single-End Assembly
[1 member, single-end handle, green cap]
[2] Single-End Assembly
[1 member, single-end handle, red cap]
[3] Double-End Assembly
[2 members, double-end handle, green & red cap]

Size (Specify size of gage members)

When ordering, configure part number and add size of gage members.

Example: **131104330 - Go .248" / NoGo .252"**

Handle Marking:

(up to 25 characters included at no charge)

Standard Class X Plug Gages

SIZES UP TO 1"

Use as masters to calibrate measuring equipment or to gage parts directly. Either way, these Class X (+.00004", -.0000" or +.0000", -.00004") Plug Gages provide accurate, cost effective measurement standards perfect for both the shop floor or Metrology Laboratory. Certificate of Accuracy included. Available with Certificate of Calibration traceable to NIST.

- ***Class X***
- ***Go (Plus) or NoGo (Minus) tolerance .00004" up to .8250" .00006" .8251" to 1.0000"***
- ***NIST traceable***
- ***Sizes available every .0001" up to 1.0000"***
- ***See pages 12-13 for Metric sizes***
- ***Tool Steel; 60/65 Rc (Cold Stabilized)***
- ***2" long***
- ***4 microinch finish or better***
- ***Round within 1/2 of tolerance***
- ***Certificate of Accuracy included***

How to Order:

14 1 _ _____ 0

Direction of tolerance
[1] Go (Plus)
[2] NoGo (Minus)

Size (Specify size of gage)
[xxxx]
Examples:
.2500" Plus pin gage = 141125000
.2501" Minus pin gage = 141225010

INCH

Range	Price 1 pc.	Price 2 to 9 pcs.	Price 10 or more pcs.
.0040" to .0250"	$25.50	$24.50	$23.00
.0251" to .0750"	$21.25	$20.25	$18.50
.0751" to .2810"	$16.50	$15.50	$14.00
.2811" to .4060"	$17.00	$15.75	$14.25
.4061" to .5100"	$18.00	$16.50	$15.00
.5101" to .6350"	$19.25	$18.25	$16.50
.6351" to .7600"	$24.25	$23.25	$21.50
.7601" to 1.0000"	$26.75	$25.75	$24.00

Combine identical sizes for best quantity column pricing.

CERTIFICATIONS

Range	Type of Certificate	Part No. New Gages	Price
.0040" to .0100"	Calibration Accredited	**973011100** **973011110**	$18.00 $30.00
.0101" to 1.000"	Calibration Accredited	**973011120** **973011130**	$15.00 $26.00

Standard Class X Go/NoGo Assemblies

A GREAT GO/NOGO INSPECTION TOOL

Class X assemblies are economical and versatile for Go/NoGo gaging. If the Go (green end) fits and the NoGo (red end) does not, your part passes inspection. It does not get any easier! Each assembly includes 1 line (up to 25 characters) of custom marking.

INCH

Range	Single-End Assembly	Double-End Assembly
.0040" to .0250"	$39.50	$69.75
.0251" to .0750"	$35.25	$61.25
.0751" to .1800"	$30.50	$51.75
.1801" to .2810"	$32.50	$53.75
.2811" to .4060"	$35.00	$57.50
.4061" to .5100"	$38.00	$61.00
.5101" to .6350"	$43.75	$69.50
.6351" to .7600"	$50.75	$81.50
.7601" to 1.0000"	$62.25	$95.50

Use larger diameter to determine proper range.

How to Order:

15 11 __ _ _ 0

Range
[01] .0040" to .0250"
[02] .0251" to .0750"
[03] .0751" to .1800"
[04] .1801" to .2810"
[05] .2811" to .4060"
[06] .4061" to .5100"
[07] .5101" to .6350"
[08] .6351" to .7600"
[09] .7601" to 1.0000"

Direction of Tolerance
[1] Go [1 member, (Plus) unilateral tolerance]
[2] NoGo [1 member, (Minus) unilateral tolerance]
[3] Go/NoGo [2 members, (1) Plus, (1) Minus tolerance]

Package
[1] Single-End Assembly
[1 member, single-end handle, green cap]
[2] Single-End Assembly
[1 member, single-end handle, red cap]
[3] Double-End Assembly
[2 members, double-end handle, green & red cap]

Size (Specify size of gage members)

When ordering, configure part number and add size of gage members.

Example: **151103330 - Go .1251" / NoGo .1258"**

Handle Marking:

(up to 25 characters included at no charge)

Made to Order Custom Sets

CUSTOMIZED CONVENIENCE!

Vermont Gage is proud to introduce our new custom sets to the fixed limit gage market. Vermont Gage Custom Sets provide a compact, organized and convenient way to store your fixed limit gages. Our custom sets will allow you to store any style gage labeled clearly for your most efficient use. Customization and personalization ensure quick identification for use of your most critical gages. High density closed cell foam provides protection and peace of mind knowing that your high tolerance gages are transported safely. In-house fabrication allows for a quick turnaround time. Call for a quote and find out more about our new Vermont Gage Custom Sets.

- ***Be more efficient with Vermont Gage Custom Sets***
- ***Class X over/under sets on demand***
- ***Store your Taperlocks, Trilocks, Rings and Threads***
- ***Closed cell foam, ensures a tight fit and safe travel***
- ***Perfect for reoccurring jobs***
- ***Buy only the gages you need***
- ***Personalize your set with laser markings***
- ***Convenience and precision that meet your needs***
- ***Boxes available in two sizes***
- ***Customize your set for quick access to the gages you need***

Custom Over/Under Sets

NOMINAL DIAMETER INSPECTION

Vermont Gage Over / Under sets are built around one nominal diameter. Twenty-four additional pins are supplied in .0001" increments. Twelve gages above and below the nominal diameter. The Class X tolerance insures a separation between each pin in the range around the nominal diameter. This allows the gage user to more accurately identify where the hole diameter is in relation to the nominal hole size.

- ***Be more efficient with Vermont Gage Class X Over/under sets***
- ***Stock Class X pins provide a quick turnaround time***
- ***Certificates of Calibration and A2LA ISO/IEC 17025 Accredited Certificates available***
- ***25 pin set in .0001" increments***
- ***Available in in both Plus and Minus tolerances***
- ***Diameters .0040" to 1.000"***
- ***NIST Traceable***
- ***Durable plastic box and closed cell foam insert with easy to read markings***

Range	Price
.0040" to .0250"	$470.00
.0251" to .0750"	$370.00
.0751" to .2810"	$275.00
.2811" to .4060"	$275.00
.4061" to .5100"	$310.00
.5101" to .6350"	$335.00
.6351" to .7600"	$465.00
.7601" to 1.0000"	$490.00

How to Order:

27 0 _ _ 000

Direction of Tolerance
[1] Go (Plus)
[2] NoGo (Minus)

Range
[01] .0040" to .0250"
[02] .0251" to .0750"
[03] .0751" to .2810"
[04] .2811" to .4060"
[05] .4061" to .5100"
[06] .5101" to .6350"
[07] .6351" to .7600"
[08] .7601" to 1.0000"

When ordering:
Configure part number and add "Nominal" size required.

Example:
270103000 - Go - .2500"

Note:
Largest "Nominal" size for series is .9988"
Smallest "Nominal" size for series is .0052"

Custom Reversibles from .0040" to 1.0100"

REVERSIBLES FOR LONGER GAGE LIFE

When one end becomes worn out of tolerance, you can reverse the gage and use the other end. This significantly increases gage life. Vermont Gage's Reversible Plug Gages feature 2" of actual gaging surface. This is crucial for gaging holes of varying depths. These custom plug gages can be assembled with a handle and marked with your tool number. The single-end and double-end assemblies include 1 line (up to 25 characters) of custom marking. These reversible plug gages are available up to 1" in several class tolerances and materials to meet your unique requirements. If you are looking for standard Class X Gage members, see pages 8-9 for best price and how to order.

- ***Class XX, X, Y, Z or ZZ***
- ***See page 116 for tolerance specifications***
- ***Go, NoGo or Master tolerances***
- ***NIST traceable***
- ***Tool Steel; 60/65 Rc (Cold Stabilized)***
- ***Chrome Plated Tool Steel; 70/72 Rc***
- ***2" long***
- ***4 microinch finish or better on Class XX or X***
- ***Handles custom marked 1 line (up to 25 characters) included, additional text quoted upon request***
- ***Inch handles – blue***
- ***Metric handles – yellow***
- ***Certificate of Accuracy included***
- ***See page 109 for Calibration Services***

How to Order:

16 _ _ ___ _ _ 0

Finish
[1] Steel
[2] Chrome Plated Tool Steel
[4] Black Guard™

Tolerance
[1] Class XX
[2] Class X
[3] Class Y
[4] Class Z
[5] Class ZZ

Range

[01] .0040" to .0150"	[0.101mm to 0.381mm]
[02] .0151" to .0300"	[0.382mm to 0.762mm]
[03] .0301" to .0750"	[0.763mm to 1.905mm]
[04] .0751" to .1800"	[1.906mm to 4.572mm]
[05] .1801" to .2810"	[4.573mm to 7.137mm]
[06] .2811" to .4060"	[7.138mm to 10.312mm]
[07] .4061" to .5100"	[10.313mm to 12.954mm]
[08] .5101" to .6350"	[12.955mm to 16.129mm]
[09] .6351" to .7600"	[16.130mm to 19.304mm]
[10] .7601" to 1.0100"	[19.305mm to 25.654mm]

Direction of Tolerance
[1] Go [1 member, (Plus) unilateral tolerance]
[2] NoGo [1 member, (Minus) unilateral tolerance]
[3] Master [1 member, bilateral tolerance]
[4] Go/NoGo [2 members, (1) Plus, (1) Minus tolerance]

Package
[1] Member Only
[2] Single-End Assembly
[1 member, single-end handle, green cap]
[3] Single-End Assembly
[1 member, single-end handle, red cap]
[4] Double-End Assembly
[2 members, double-end handle, green & red cap]

Size (Specify size of gage members)

When ordering, configure part number and add size of gage members.

Example: **161205440 - Go .2480" / NoGo .2520"**

Handle Marking:

(up to 25 characters included at no charge)

Custom Reversibles from .0040" to 1.0100"

		Steel			Chrome				Black Guard ™		
Range	Tolerance Class	Member Only	Single-End Assembly	Double-End Assembly	Member Only	Single-End Assembly	Double-End Assembly	Tolerance Class	Member Only	Single-End Assembly	Double-End Assembly
.0040" to .0150"	XX	$86.00	$100.00	$190.75							
0.101mm to 0.381mm	X	$57.00	$71.00	$132.75							
[01]	Y	$41.75	$55.75	$102.25				Z	$39.50	$53.50	$97.75
	Z, ZZ	$26.00	$40.00	$70.75				ZZ	$32.25	$46.25	$83.25
.0151" to .0300"	XX	$60.00	$74.00	$138.75							
0.382mm to 0.762mm	X	$37.50	$51.50	$93.75							
[02]	Y	$28.50	$42.50	$75.75				Z	$29.75	$43.75	$78.25
	Z, ZZ	$23.00	$37.00	$64.75				ZZ	$27.25	$41.25	$73.25
.0301" to .0750"	XX	$38.00	$52.00	$94.75	$56.00	$70.00	$130.75				
0.763mm to 1.905mm	X	$24.00	$38.00	$66.75	$37.00	$51.00	$92.75				
[03]	Y	$17.75	$31.75	$54.25	$31.00	$45.00	$80.75	Z	$21.00	$35.00	$60.75
(Chrome availible over .040")	Z, ZZ	$15.50	$29.50	$49.75	$27.00	$41.00	$72.75	ZZ	$18.50	$32.50	$55.75
.0751" to .1800"	XX	$40.00	$54.00	$98.75	$60.00	$74.00	$138.75				
1.906mm to 4.572mm	X	$25.00	$39.00	$68.75	$39.50	$53.50	$97.75				
[04]	Y	$17.75	$31.75	$54.25	$35.00	$49.00	$88.75	Z	$20.00	$34.00	$58.75
	Z, ZZ	$14.25	$28.25	$47.25	$27.00	$41.00	$72.75	ZZ	$17.50	$31.50	$53.75
.1801" to .2810"	XX	$42.00	$58.00	$104.75	$64.00	$80.00	$148.75				
4.573mm to 7.137mm	X	$29.00	$45.00	$78.75	$45.00	$61.00	$110.75				
[05]	Y	$22.50	$38.50	$65.75	$36.00	$52.00	$92.75	Z	$20.00	$36.00	$60.75
	Z, ZZ	$14.25	$30.25	$49.25	$28.00	$44.00	$76.75	ZZ	$17.50	$33.50	$55.75
.2811" to .4060"	XX	$43.00	$60.00	$107.50	$66.00	$83.00	$153.50				
7.138mm to 10.312mm	X	$30.75	$47.75	$83.00	$47.00	$64.00	$115.50				
[06]	Y	$23.75	$40.75	$69.00	$38.50	$55.50	$98.50	Z	$20.00	$37.00	$61.50
	Z, ZZ	$14.25	$31.25	$50.00	$29.50	$46.50	$80.50	ZZ	$17.50	$34.50	$56.50
.4061" to .5100"	XX	$45.00	$65.00	$115.00	$68.50	$88.50	$162.00				
10.313mm to 12.954mm	X	$33.00	$53.00	$91.00	$50.50	$70.50	$126.00				
[07]	Y	$24.00	$44.00	$73.00	$39.50	$59.50	$104.00	Z	$21.00	$41.00	$67.00
	Z, ZZ	$15.25	$35.25	$55.50	$30.25	$50.25	$85.50	ZZ	$18.50	$38.50	$62.00
.5101" to .6350"	XX	$49.00	$73.50	$129.00	$74.00	$98.50	$179.00				
12.955mm to 16.129mm	X	$35.00	$59.50	$101.00	$54.50	$79.00	$140.00				
[08]	Y	$29.00	$53.50	$89.00	$44.50	$69.00	$120.00	Z	$22.50	$47.00	$76.00
	Z, ZZ	$16.75	$41.25	$64.50	$32.00	$56.50	$95.00	ZZ	$20.00	$44.50	$71.00
.6351" to .7600"	XX	$52.00	$78.50	$137.00	$77.00	$103.50	$187.00				
16.130mm to 19.304mm	X	$38.00	$64.50	$109.00	$58.00	$84.50	$149.00				
[09]	Y	$30.00	$56.50	$93.00	$46.50	$73.00	$126.00	Z	$27.25	$53.75	$87.50
	Z, ZZ	$20.25	$46.75	$73.50	$37.00	$63.50	$107.00	ZZ	$23.50	$50.00	$80.00
.7601" to 1.0100"	XX	$78.00	$113.50	$198.00	$118.00	$153.50	$278.00				
19.305mm to 25.654mm	X	$48.00	$83.50	$138.00	$79.00	$114.50	$200.00				
[10]	Y	$37.25	$72.75	$116.50	$70.50	$106.00	$183.00	Z	$28.75	$64.25	$99.50
	Z, ZZ	$22.50	$58.00	$87.00	$63.00	$98.50	$168.00	ZZ	$26.00	$61.50	$94.00

QTY DISCOUNTS
2 pcs. & Up... Less 10%
Combine identical sizes for quantity discount
(Excludes Class XX products)

Carbide Custom Reversibles from .0300" to 1.0000"

REVERSIBLES FOR LONGER GAGE LIFE

When inspecting abrasive materials or a high volume of parts, consider using Vermont Gage carbide plug gages. The harder material increases the gage life in high wear applications. Carbide reversible plug gages may be assembled with a handle and marked with your tool number. Carbide reversible plug gages are available up to 1" in several tolerance classes to meet your unique high wear applications.

- ***Class XX, X, Y, Z or ZZ***
- ***See page 116 for tolerance specifications***
- ***Go, NoGo or Master tolerances***
- ***NIST traceable***
- ***Tungsten Carbide 90/92 Ra***
- ***2" long***
- ***4 microinch finish or better on Class XX or X***
- ***Handles custom marked 1 line (up to 25 characters) included, additional text quoted upon request***
- ***Inch handles – blue***
- ***Metric handles – yellow***
- ***Certificate of Accuracy included***
- ***See page 109 for Calibration Services***

How to Order:

16 _ _ ___ _ _ 0

Material
[3] Carbide

Tolerance
[1] Class XX
[2] Class X
[3] Class Y
[4] Class Z
[5] Class ZZ

Range

[01] .0300" to .0750"	[0.763mm to 1.905mm]
[02] .0751" to .1300"	[1.906mm to 3.302mm]
[03] .1301" to .1800"	[3.303mm to 4.572mm]
[04] .1801" to .2300"	[4.573mm to 5.842mm]
[05] .2301" to .2810"	[5.843mm to 7.137mm]
[06] .2811" to .3430"	[7.138mm to 8.712mm]
[07] .3431" to .4060"	[8.713mm to 10.312mm]
[08] .4061" to .4590"	[10.313mm to 11.658mm]
[09] .4591" to .5100"	[11.659mm to 12.954mm]
[10] .5101" to .5720"	[12.955mm to 14.528mm]
[11] .5721" to .6350"	[14.529mm to 16.129mm]
[12] .6351" to .6970"	[16.130mm to 17.703mm]
[13] .6971" to .7600"	[17.704mm to 19.304mm]
[14] .7601" to .9170"	[19.305mm to 23.291mm]
[15] .9171" to 1.0000"	[23.292mm to 25.400mm]

Direction of Tolerance
[1] Go [1 member, (Plus) unilateral tolerance]
[2] NoGo [1 member, (Minus) unilateral tolerance]
[3] Master [1 member, bilateral tolerance]
[4] Go/NoGo [2 members, (1) Plus, (1) Minus tolerance]

Package
[1] Member Only
[2] Single-End Assembly
[1 member, single-end handle, green cap]
[3] Single-End Assembly
[1 member, single-end handle, red cap]
[4] Double-End Assembly
[2 members, double-end handle, green & red cap]

Size (Specify size of gage members)

When ordering, configure part number and add size of gage members.

Example: **163205440 - Go .2480" / NoGo .2520"**

Handle Marking:

(up to 25 characters included at no charge)

Carbide Custom Reversibles from .0300" to 1.0000"

Range	Tolerance Class	Member Only	Single-End Assembly	Double-End Assembly
.0300" to .0750"	XX	$85.00	$99.00	$188.75
0.762mm to 1.905mm	X	$76.00	$90.00	$170.75
[01]	Y	$70.00	$84.00	$158.75
	Z, ZZ	$65.00	$79.00	$148.75
.0751" to .1300"	XX	$81.00	$95.00	$180.75
1.906mm to 3.302mm	X	$70.00	$84.00	$158.75
[02]	Y	$66.00	$80.00	$150.75
	Z, ZZ	$63.00	$77.00	$144.75
.1301" to .1800"	XX	$84.00	$98.00	$186.75
3.303mm to 4.572mm	X	$73.00	$87.00	$164.75
[03]	Y	$67.00	$81.00	$152.75
	Z, ZZ	$64.00	$78.00	$146.75
.1801" to .2300"	XX	$86.00	$102.00	$192.75
4.573mm to 5.842mm	X	$74.00	$90.00	$168.75
[04]	Y	$70.00	$86.00	$160.75
	Z, ZZ	$65.00	$81.00	$150.75
.2301" to .2810"	XX	$94.00	$110.00	$208.75
5.843mm to 7.137mm	X	$80.00	$96.00	$180.75
[05]	Y	$76.00	$92.00	$172.75
	Z, ZZ	$73.00	$89.00	$166.75
.2811" to .3430"	XX	$100.00	$117.00	$221.50
7.138mm to 8.712mm	X	$85.00	$102.00	$191.50
[06]	Y	$78.00	$95.00	$177.50
	Z, ZZ	$75.00	$92.00	$171.50
.3431" to .4060"	XX	$110.00	$127.00	$241.50
8.713mm to 10.312mm	X	$100.00	$117.00	$221.50
[07]	Y	$91.00	$108.00	$203.50
	Z, ZZ	$85.00	$102.00	$191.50

Range	Tolerance Class	Member Only	Single-End Assembly	Double-End Assembly
.4061" to .4590"	XX	$120.00	$140.00	$265.00
10.313mm to 11.658mm	X	$104.00	$124.00	$233.00
[08]	Y	$100.00	$120.00	$225.00
	Z, ZZ	$94.00	$114.00	$213.00
.4591" to .5100"	XX	$128.00	$148.00	$281.00
11.659mm to 12.954mm	X	$117.00	$137.00	$259.00
[09]	Y	$107.00	$127.00	$239.00
	Z, ZZ	$101.00	$121.00	$227.00
.5101" to .5720"	XX	$160.00	$184.50	$351.00
12.955mm to 14.528mm	X	$140.00	$164.50	$311.00
[10]	Y	$130.00	$154.50	$291.00
	Z, ZZ	$124.00	$148.50	$279.00
.5721" to .6350"	XX	$205.00	$229.50	$441.00
14.529mm to 16.129mm	X	$185.00	$209.50	$401.00
[11]	Y	$175.00	$199.50	$381.00
	Z, ZZ	$168.00	$192.50	$367.00
.6351" to .6970"	XX	$224.00	$250.50	$481.00
16.130mm to 17.703mm	X	$205.00	$231.50	$443.00
[12]	Y	$184.00	$210.50	$401.00
	Z, ZZ	$177.00	$203.50	$387.00
.6971" to .7600"	XX	$255.00	$281.50	$543.00
17.704mm to 19.304mm	X	$235.00	$261.50	$503.00
[13]	Y	$220.00	$246.50	$473.00
	Z, ZZ	$203.00	$229.50	$439.00
.7601" to .9170"	XX	$301.00	$336.50	$644.00
19.305mm to 23.291mm	X	$280.00	$315.50	$602.00
[14]	Y	$254.00	$289.50	$550.00
	Z, ZZ	$228.00	$263.50	$498.00
.9171" to 1.0000"	XX	$339.00	$374.50	$720.00
23.292mm to 25.400mm	X	$319.00	$354.50	$680.00
[15]	Y	$293.00	$328.50	$628.00
	Z, ZZ	$265.00	$300.50	$572.00

QTY DISCOUNTS
2 pcs. & Up... Less 10%
Combine identical sizes for quantity discount
(Excludes Class XX products)

Custom Economy Step Gages/Check Gages

CHECK GO & NOGO TOLERANCE SIMULTANEOUSLY

Step Plug Gages have two gaging diameters to allow checking of Go and NoGo tolerances simultaneously or for checking stepped ID's.

- ***Class ZZ (.0002" or .005mm) or Class Z (.0001" or .0025mm)***
- ***NIST traceable***
- ***52100 Tool Steel; 60/65 Rc***
- ***2" OAL members***
- ***10 microinch finish or better***
- ***Round within 1/2 of tolerance***
- ***Custom Markings, 1 line (up to 25 characters) included, additional text quoted upon request***
- ***Inch handles – blue***
- ***Metric handles – yellow***
- ***Other classes available, refer to Progressive design on pages 24-25***
- ***Certificate of Accuracy included***
- ***See page 109 for Calibration Services***

How to Order:

_ 2 _ _ ___ _ _ 0

Finish
[1] Steel
[9] Black Guard™

Scale
[1] Inch
[2] Metric

Tolerance
[1] Class Z
[2] Class ZZ

Range

[01] .0610" to .0750"	[1.54mm to 1.90mm]
[02] .0751" to .1800"	[1.91mm to 4.56mm]
[03] .1801" to .2810"	[4.57mm to 7.14mm]
[04] .2811" to .4060"	[7.15mm to 10.30mm]
[05] .4061" to .5100"	[10.31mm to 12.94mm]
[06] .5101" to .6350"	[12.95mm to 16.12mm]
[07] .6351" to .7600"	[16.13mm to 19.30mm]
[08] .7601" to .8320"	[19.31mm to 21.13mm]
[09] .8321" to 1.0050"	[21.14mm to 25.52mm]

Direction of Tolerance
[1] Pin diameter Minus, Step diameter Plus
[2] Pin diameter Minus, Step diameter Minus
[3] Pin diameter Plus, Step diameter Plus
[4] Pin diameter Plus, Step diameter Minus

Package
[1] Member Only
[2] Single-End Assembly
[1 member, single-end handle, green cap]
[3] Single-End Assembly
[1 member, single-end handle, red cap]

Size (Specify size of gage members)

When ordering, configure part number and add size of gage members.

Example: **121202110 - Pin .1750" / Step .1680"**

Handle Marking:

(up to 25 characters included at no charge)

Custom Economy Step Gages/Check Gages

Range	Tolerance Class	Max Step	Step Length	Steel Member Only	Steel Single-End Assembly	Black Guard ™ Member Only	Black Guard ™ Single-End Assembly
.0610" to .0750"							
1.54mm to 1.90mm	Z	.030	1/2"	$94.00	$108.00	$102.00	$116.00
[01]	ZZ	.030	1/2"	$56.00	$70.00	$65.00	$79.00
.0751" to .1800"							
1.91mm to 4.56mm	Z	.050	1/2"	$94.00	$108.00	$102.00	$116.00
[02]	ZZ	.050	1/2"	$56.00	$70.00	$65.00	$79.00
.1801" to .2810"							
4.57mm to 7.14mm	Z	.100	1/2"	$95.00	$111.00	$107.00	$123.00
[03]	ZZ	.100	1/2"	$56.00	$72.00	$66.00	$82.00
.2811" to .4060"							
7.15mm to 10.30mm	Z	.100	3/4"	$95.00	$112.00	$107.00	$124.00
[04]	ZZ	.100	3/4"	$56.00	$73.00	$66.00	$83.00
.4061" to .5100"							
10.31mm to 12.94mm	Z	.100	3/4"	$96.00	$116.00	$107.00	$127.00
[05]	ZZ	.100	3/4"	$62.00	$82.00	$69.00	$89.00
.5101" to .6350"							
12.95mm to 16.12mm	Z	.150	3/4"	$101.00	$125.50	$113.00	$137.50
[06]	ZZ	.150	3/4"	$76.00	$100.50	$86.00	$110.50
.6351" to .7600"							
16.13mm to 19.30mm	Z	.150	1"	$104.00	$130.50	$116.00	$142.50
[07]	ZZ	.150	1"	$76.00	$102.50	$86.00	$112.50
.7601" to .8320"							
19.31mm to 21.20mm	Z	.150	1"	$104.00	$139.50	$116.00	$151.50
[08]	ZZ	.150	1"	$76.00	$111.50	$86.00	$121.50
.8321" to 1.0050"							
21.21mm to 25.52mm	Z	.150	1"	$112.00	$147.50	$124.00	$159.50
[09]	ZZ	.150	1"	$93.00	$128.50	$102.00	$137.50

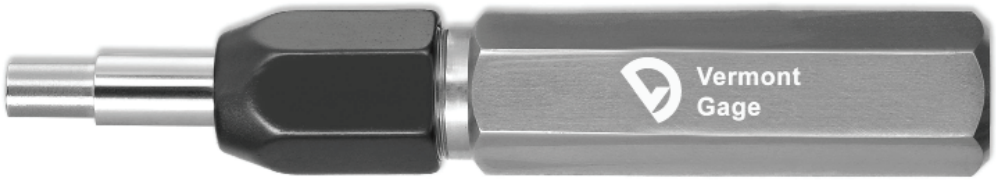

Custom Long Length Reversibles up to 12" Long

UP TO 12" LONG

Reversible Plug Gages can be furnished in lengths up to 12" long. With the same specifications as our standard 2" gages (excluding straightness), these long members are perfect for gaging deep, hard-to-reach holes, slots and other dimensions.

- ***Class XX, X, Y, Z or ZZ***
- ***See page 116 for tolerance specifications***
- ***Go, NoGo or Master tolerances***
- ***NIST traceable***
- ***Tool Steel; 60/65 Rc (Cold Stabilized)***
- ***Chrome Plated Tool Steel; 70/72 Rc***
- ***Up to 12" long (Class ZZ only)***
- ***4 microinch finish or better on Class XX or X***
- ***Depth Notches available – see page 113***
- ***Certificate of Accuracy included***
- ***See page 109 for Calibration Services***

How to Order:

17 _ _ _ _ _ 0

Finish
[1] Tool Steel
[2] Chrome Plated Tool Steel
[4] Black Guard™

Tolerance
[1] Class XX
[2] Class X
[3] Class Y
[4] Class Z
[5] Class ZZ

Range

[02] .0151" to .0300"	[0.382mm to 0.762mm]
[03] .0301" to .0750"	[0.763mm to 1.905mm]
[04] .0751" to .1800"	[1.906mm to 4.572mm]
[05] .1801" to .2810"	[4.573mm to 7.137mm]
[06] .2811" to .4060"	[7.138mm to 10.312mm]
[07] .4061" to .5100"	[10.313mm to 12.954mm]
[08] .5101" to .6350"	[12.955mm to 16.129mm]
[09] .6351" to .7600"	[16.130mm to 19.304mm]
[10] .7601" to 1.0100"	[19.305mm to 25.654mm]

Direction of Tolerance
[1] Go [1 member, (Plus) unilateral tolerance]
[2] NoGo [1 member, (Minus) unilateral tolerance]
[3] Master [1 member, bilateral tolerance]

Length
[1] up to 3"
[2] up to 4"
[3] up to 5"
[4] up to 6"
[5] up to 9"
[6] up to 12"

Size (Specify size of gage members)

When ordering, configure part number and add size of gage members.

Example: **171205140 - .2520" x 5.50"**

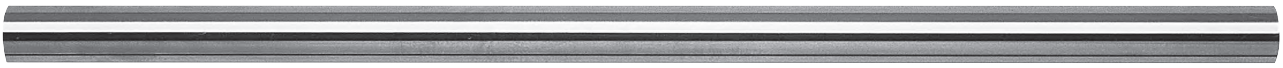

Custom Long Length Reversibles up to 12" Long

		Steel						Black Guard ™			
Range	Tolerance Class	up to 3"	up to 4"	up to 5"	up to 6"	up to 9"	up to 12"	up to 3"	up to 4"	up to 5"	up to 6"
.0151" to .0300"	XX	$233.00	$310.00								
.382mm to .762mm	X	$151.00	$205.00								
(Chrome not available)	Y	$119.00	$157.00	$215.00	$378.00						
[02]	Z	$106.00	$134.00	$184.00	$360.00			$145.00	$174.00	$233.00	$446.00
	ZZ	$56.00	$75.00	$90.00	$106.00	$122.00	$136.00	$70.00	$88.00	$108.00	$125.00
.0301" to .0750"	XX	$123.00	$166.00								
.763mm to 1.905mm	X	$86.00	$114.00	$208.00	$278.00						
(Chrome not available)	Y	$78.00	$97.00	$180.00	$242.00						
[03]	Z	$65.00	$83.00	$130.00	$151.00			$91.00	$114.00	$176.00	$202.00
	ZZ	$50.00	$55.00	$71.00	$75.00	$90.00	$102.00	$63.00	$81.00	$99.00	$112.00
.0751" to .1800"	XX	$123.00	$166.00								
1.906mm to 4.572mm	X	$86.00	$114.00	$140.00	$160.00						
(Chrome available to 6")	Y	$78.00	$97.00	$120.00	$145.00						
[04]	Z	$65.00	$83.00	$104.00	$128.00			$91.00	$113.00	$157.00	$176.00
	ZZ	$50.00	$55.00	$68.00	$77.50	$85.00	$92.00	$63.00	$81.00	$97.00	$103.00
.1801" to .2810"	XX	$123.00	$166.00								
4.573mm to 7.137mm	X	$86.00	$114.00	$140.00	$160.00						
(Chrome available to 6")	Y	$78.00	$98.00	$120.00	$145.00						
[05]	Z	$65.00	$83.00	$104.00	$126.00			$91.00	$121.00	$157.00	$170.00
	ZZ	$50.00	$55.00	$75.00	$83.00	$92.00	$100.00	$63.00	$88.00	$97.00	$98.00
.2811" to .4060"	XX	$123.00	$166.00	$202.00	$230.00						
7.138mm to 10.312mm	X	$86.00	$114.00	$140.00	$162.00						
(Chrome available to 6")	Y	$78.00	$98.00	$120.00	$145.00						
[06]	Z	$65.00	$83.00	$104.00	$126.00			$91.00	$121.00	$157.00	$176.00
	ZZ	$50.00	$55.00	$75.00	$83.00	$92.00	$100.00	$63.00	$88.00	$97.00	$101.00
.4061" to .5100"	XX	$123.00	$157.00	$208.00	$247.00						
10.313mm to 12.954mm	X	$86.00	$121.00	$146.00	$170.00						
(Chrome available to 6")	Y	$78.00	$106.00	$126.00	$152.00						
[07]	Z	$65.00	$83.00	$108.00	$134.00			$91.00	$121.00	$166.00	$184.00
	ZZ	$57.00	$63.00	$75.00	$83.00	$92.00	$108.00	$70.00	$94.00	$107.00	$112.00
.5101" to .6350"	XX	$123.00	$157.00	$215.00	$252.00						
12.955mm to 16.129mm	X	$86.00	$121.00	$152.00	$183.00						
(Chrome available to 6")	Y	$78.00	$106.00	$132.00	$157.00						
[08]	Z	$65.00	$83.00	$112.00	$140.00			$91.00	$121.00	$176.00	$195.00
	ZZ	$57.00	$63.00	$77.00	$88.00	$100.00	$113.00	$70.00	$94.00	$120.00	$126.00
.6351" to .7600"	XX	$123.00	$164.00	$220.00	$259.00						
16.130mm to 19.304mm	X	$86.00	$126.00	$157.00	$189.00						
(Chrome available to 6")	Y	$78.00	$112.00	$138.00	$157.00						
[09]	Z	$65.00	$94.00	$126.00	$146.00			$94.50	$125.00	$176.00	$195.00
	ZZ	$57.00	$75.00	$90.00	$101.00	$120.00	$135.00	$76.50	$100.00	$120.00	$126.00
.7601" to 1.0100"	XX	$207.00	$258.00	$370.00	$498.00						
19.305mm to 25.654mm	X	$141.00	$170.00	$247.00	$340.00						
(Chrome available to 6")	Y	$132.00	$157.00	$227.00	$315.00						
[10]	Z	$123.00	$150.00	$213.00	$288.00			$170.00	$213.00	$314.00	$408.00
	ZZ	$89.00	$97.00	$112.00	$132.00	$160.00	$186.00	$111.00	$125.00	$146.00	$173.00

Chrome Plated Tool Steel - Add 50% to Steel price.

Custom Taperlocks from .1501" to 1.5100"

CHANGE GAGE MEMBERS QUICKLY

When you need to gage larger diameters or need to change or replace gage members often, Taperlock Plug Gages are your perfect choice. To change gage members, simply pop-out existing members and press fit new members in your taperlock handle. Each taperlock handle size covers a wide range of gage sizes. Custom plug gage assemblies can be marked with your tool number. Taperlock Gage assemblies include 1 line (up to 25 characters) of custom marking. These Taperlock Plug Gages are available up to 1.5100" in all classes tolerances to meet your unique requirements.

- ***Class XX, X, Y, Z or ZZ***
- ***See page 116 for tolerance specifications***
- ***Go, NoGo tolerances***
- ***NIST traceable***
- ***Tool Steel; 60/65 Rc (Cold Stabilized)***
- ***Chrome Plated Tool Steel; 70/72 Rc***
- ***4 microinch finish or better on Class XX or X***
- ***Handles custom marked 1 line (up to 25 characters) included, additional text quoted upon request***
- ***Inch handles – blue***
- ***Metric handles – yellow***
- ***Certificate of Accuracy included***
- ***See page 109 for Calibration Services***

How to Order:

18 _ _ ___ _ _ 0

Finish
[1] Steel
[2] Chrome Plated Tool Steel
[4] Black Guard™

Tolerance
[1] Class XX
[2] Class X
[3] Class Y
[4] Class Z
[5] Class ZZ

Range

[02] .1501" to .2300"	[3.82mm to 5.84mm]
[03] .2301" to .3650"	[5.85mm to 9.27mm]
[04] .3651" to .5100"	[9.28mm to 12.95mm]
[05] .5101" to .8250"	[12.96mm to 20.95mm]
[06] .8251" to 1.1350"	[20.96mm to 28.83mm]
[07] 1.1351" to 1.5100"	[28.84mm to 38.35mm]

Direction of Tolerance
[1] Go [1 member, (Plus) unilateral tolerance]
[2] NoGo [1 member, (Minus) unilateral tolerance]
[3] Go/NoGo [2 members, (1) Plus, (1) Minus tolerance]
[4] Go Assembly [1 member, (1) Plus, unilateral tolerance]
[5] NoGo Assembly [1 member, (1) Minus, unilateral tolerance]

Package
[1] Member Only
[2] Gage Assembly [Gage(s) with Handle]

Size (Specify size of gage members)
Configure part number and add size of gage members.

Example: **181206320 - Go .9980" / NoGo 1.0000"**
Handle Marking:
(up to 25 characters included at no charge)

Custom Taperlocks from .1501" to 1.5100"

		Steel					Black Guard ™				
Range	Tolerance Class	Go Member	Go Assembly	NoGo Member	NoGo Assembly	Go/NoGo Assembly	Go Member	Go Assembly	NoGo Member	NoGo Assembly	Go/NoGo Assembly
.1501" to .2300"	XX	$79.50	$95.50	$76.00	$92.00	$171.50					
3.82mm to 5.84mm	X	$61.00	$77.00	$59.50	$75.50	$136.50					
[02]	Y	$55.00	$71.00	$54.00	$70.00	$125.00					
	Z	$52.00	$68.00	$51.00	$67.00	$119.00	$76.00	$92.00	$73.00	$89.00	$165.00
	ZZ	$52.00	$68.00	$51.00	$67.00	$119.00	$67.00	$83.00	$63.00	$79.00	$146.00
.2301" to .3650"	XX	$79.50	$95.50	$76.00	$92.00	$171.50					
5.85mm to 9.27mm	X	$61.00	$77.00	$59.50	$75.50	$136.50					
[03]	Y	$55.00	$71.00	$54.00	$70.00	$125.00					
	Z	$52.00	$68.00	$51.00	$67.00	$119.00	$76.00	$92.00	$73.00	$89.00	$165.00
	ZZ	$52.00	$68.00	$51.00	$67.00	$119.00	$67.00	$83.00	$63.00	$79.00	$146.00
.3651" to .5100"	XX	$79.50	$95.50	$76.00	$92.00	$171.50					
9.28mm to 12.95mm	X	$61.00	$77.00	$59.50	$75.50	$136.50					
[04]	Y	$55.00	$71.00	$54.00	$70.00	$125.00					
	Z	$52.00	$68.00	$51.00	$67.00	$119.00	$76.00	$92.00	$75.00	$91.00	$167.00
	ZZ	$52.00	$68.00	$51.00	$67.00	$119.00	$67.00	$83.00	$67.00	$83.00	$150.00
.5101" to .8250"	XX	$83.00	$99.00	$82.00	$98.00	$181.00					
12.96mm to 20.95mm	X	$67.50	$83.50	$65.00	$81.00	$148.50					
[05]	Y	$59.50	$75.50	$58.50	$74.50	$134.00					
	Z	$57.50	$73.50	$55.00	$71.00	$128.50	$82.00	$98.00	$81.00	$97.00	$179.00
	ZZ	$57.50	$73.50	$55.00	$71.00	$128.50	$70.00	$86.00	$67.00	$83.00	$153.00
.8251" to 1.1350"	XX	$92.50	$109.75	$86.00	$103.25	$195.75					
20.96mm to 28.83mm	X	$70.50	$87.75	$66.00	$83.25	$153.75					
[06]	Y	$63.00	$80.25	$62.00	$79.25	$142.25					
	Z	$58.50	$75.75	$57.50	$74.75	$133.25	$88.00	$105.25	$84.00	$101.25	$189.25
	ZZ	$58.50	$75.75	$57.50	$74.75	$133.25	$76.00	$93.25	$72.00	$89.25	$165.25
1.1351" to 1.5100"	XX	$97.00	$115.50	$95.00	$113.50	$210.50					
28.84mm to 38.35mm	X	$76.00	$94.50	$73.00	$91.50	$167.50					
[07]	Y	$71.50	$90.00	$67.50	$86.00	$157.50					
	Z	$63.00	$81.50	$60.50	$79.00	$142.00	$94.00	$112.50	$92.00	$110.50	$204.50
	ZZ	$63.00	$81.50	$60.50	$79.00	$142.00	$82.00	$100.50	$79.00	$97.50	$179.50

QTY DISCOUNTS - 2pcs. & Up... Less 10% - Combine identical sizes for quantity discount *(Excludes Class XX products)*
Chrome Plated Tool Steel - Add 50% to Steel price.

Blank Specs			
Range	Handle No.	B Go Member	B NoGo Member
[02]	0	0.593	0.281
[03]	1	0.750	0.312
[04]	2	1.000	0.375
[05]	3	1.250	0.500
[06]	4	1.500	0.625
[07]	5	1.625	0.750

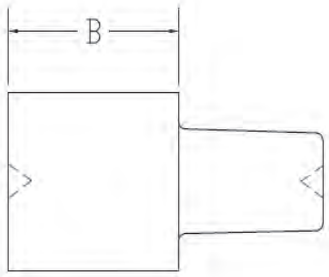

Go

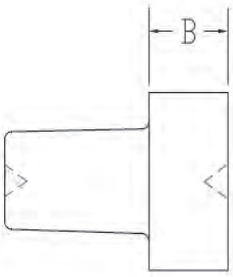

NoGo

Custom Trilocks from .7600" to 6.0100"

FOR LARGE DIMENSIONS

When you need to inspect large diameters, Trilock Plug Gages are your best solution. Much like Reversible Plug Gages, when one end wears out, simply turn the member around and continue gaging, significantly increasing the gaging life. Members are securely attached to your trilock handle with mounting bolts. Custom Plug Gage assemblies can be marked with your tool number. Go/NoGo assemblies include 1 line (up to 25 characters) of custom marking. These Trilock Plug Gages are available up to 6" in all class tolerances to meet your unique requirements.

- ***Class XX, X, Y, Z or ZZ***
- ***See page 116 for tolerance specifications***
- ***Go, NoGo tolerances***
- ***NIST traceable***
- ***Tool Steel; 60/65 Rc (Cold Stabilized)***
- ***Chrome Plated Tool Steel; 70/72 Rc***
- ***4 microinch finish or better on Class XX or X***
- ***Handles custom marked 1 line (up to 25 characters) included, additional text quoted upon request***
- ***Inch handles – blue***
- ***Metric handles – yellow***
- ***Certificate of Accuracy included***
- ***See page 109 for Calibration Services***

How to Order:

19 _ _ ___ _ _ 0

Finish
[1] Steel
[2] Chrome Plated Tool Steel
[4] Black Guard™

Tolerance
[1] Class XX
[2] Class X
[3] Class Y
[4] Class Z
[5] Class ZZ

Range

[01] .7600" to .9470"	[19.30mm to 24.05mm]
[02] .9471" to 1.1350"	[24.06mm to 28.83mm]
[03] 1.1351" to 1.5100"	[28.84mm to 38.35mm]
[04] 1.5101" to 2.0100"	[38.36mm to 51.05mm]
[05] 2.0101" to 2.5100"	[51.06mm to 63.75mm]
[06] 2.5101" to 3.0100"	[63.76mm to 76.45mm]
[07] 3.0101" to 3.5100"	[76.46mm to 89.15mm]
[08] 3.5101" to 4.0100"	[89.16mm to 101.85mm]
[09] 4.0101" to 4.5100"	[101.86mm to 114.55mm]
[10] 4.5101" to 5.0100"	[114.56mm to 127.25mm]
[11] 5.0101" to 5.5100"	[127.26mm to 139.95mm]
[12] 5.5101" to 6.0100"	[139.96mm to 152.65mm]

Direction of Tolerance
[1] Go [1 member, (Plus) unilateral tolerance]
[2] NoGo [1 member, (Minus) unilateral tolerance]
[3] Go/NoGo [2 members, (1) Plus, (1) Minus tolerance]
[4] Go Assembly [1 member, (1) Plus, unilateral tolerance]
[5] NoGo Assembly [1 member, (1) Minus, unilateral tolerance]

Package
[1] Member Only
[2] Assembly [Gage(s) with Handle]

Size (Specify size of gage members)
Configure part number and add size of gage members.

Example: **191206320 - Go 2.4480" / NoGo 2.5000"**
Handle Marking:
(up to 25 characters included at no charge)

Custom Trilocks from .7600" to 6.0100"

		Steel						Black Guard ™				
Range	Tolerance Class	Go Member	Go Assembly	NoGo Member	NoGo Assembly	Go/NoGo Assembly	Tolerance Class	Go Member	Go Assembly	NoGo Member	NoGo Assembly	Go/NoGo Assembly
.7600" to .9470"	XX	$102.00	$120.50	$99.00	$117.50	$221.00						
19.30mm to 24.05mm	X	$76.00	$94.50	$72.50	$91.00	$168.50						
[01]	Y	$68.00	$86.50	$64.50	$83.00	$152.50	Z	$90.00	$108.50	$67.00	$85.50	$177.00
	Z, ZZ	$52.00	$70.50	$45.50	$64.00	$117.50	ZZ	$64.00	$82.50	$57.50	$76.00	$141.50
.9471" to 1.1350"	XX	$104.00	$124.00	$98.00	$118.00	$223.50						
24.06mm to 28.83mm	X	$78.00	$98.00	$75.00	$95.00	$174.50						
[02]	Y	$70.00	$90.00	$68.00	$88.00	$159.50	Z	$75.00	$95.00	$68.00	$88.00	$164.50
	Z, ZZ	$55.00	$75.00	$48.00	$68.00	$124.50	ZZ	$67.00	$87.00	$57.50	$77.50	$146.00
1.1351" to 1.5100"	XX	$107.00	$128.50	$102.00	$123.50	$231.50						
28.84mm to 38.35mm	X	$85.00	$106.50	$79.00	$100.50	$186.50						
[03]	Y	$74.00	$95.50	$70.00	$91.50	$166.50	Z	$88.00	$109.50	$78.50	$100.00	$189.00
	Z, ZZ	$62.00	$83.50	$55.00	$76.50	$139.50	ZZ	$75.00	$96.50	$68.00	$89.50	$165.50
1.5101" to 2.0100"	XX	$153.00	$177.00	$146.00	$170.00	$324.50						
38.36mm to 51.05mm	X	$122.00	$146.00	$117.00	$141.00	$264.50						
[04]	Y	$104.00	$128.00	$98.00	$122.00	$227.50	Z	$130.00	$154.00	$120.00	$144.00	$275.50
	Z, ZZ	$94.00	$118.00	$85.00	$109.00	$204.50	ZZ	$115.00	$139.00	$104.00	$128.00	$244.50
2.0101" to 2.5100"	XX	$170.00	$196.50	$162.00	$188.50	$360.00						
51.06mm to 63.75mm	X	$130.00	$156.50	$122.00	$148.50	$280.00						
[05]	Y	$120.00	$146.50	$114.00	$140.50	$262.00	Z	$155.00	$181.50	$144.00	$170.50	$327.00
	Z, ZZ	$112.00	$138.50	$104.00	$130.50	$244.00	ZZ	$134.00	$160.50	$126.00	$152.50	$288.00
2.5101" to 3.0100"	XX	$208.00	$237.00	$193.00	$222.00	$433.00						
63.76mm to 76.45mm	X	$156.00	$185.00	$143.00	$172.00	$331.00						
[06]	Y	$137.00	$166.00	$121.00	$150.00	$290.00	Z	$165.00	$194.00	$144.00	$173.00	$341.00
	Z, ZZ	$117.00	$146.00	$104.00	$133.00	$253.00	ZZ	$144.00	$173.00	$126.00	$155.00	$302.00
3.0101" to 3.5100"	XX	$300.00	$329.00	$263.00	$292.00	$621.00						
76.46mm to 89.15mm	X	$248.00	$277.00	$220.00	$249.00	$526.00						
[07]	Y	$202.00	$231.00	$173.00	$202.00	$433.00	Z	$253.00	$282.00	$212.00	$241.00	$523.00
	Z, ZZ	$179.00	$208.00	$150.00	$179.00	$387.00	ZZ	$219.00	$248.00	$185.00	$214.00	$462.00
3.5101" to 4.0100"	XX	$338.00	$367.00	$302.00	$331.00	$698.00						
89.16mm to 101.85mm	X	$274.00	$303.00	$238.00	$267.00	$570.00						
[08]	Y	$240.00	$269.00	$204.00	$233.00	$502.00	Z	$310.00	$339.00	$258.00	$287.00	$626.00
	Z, ZZ	$220.00	$249.00	$197.00	$226.00	$475.00	ZZ	$265.00	$294.00	$224.00	$253.00	$547.00
4.0101" to 4.5100"	XX											
101.86mm to 114.55mm	X											
[09]	Y											
	Z, ZZ											
4.5101" to 5.0100"	XX											
114.56mm to 127.25mm	X											
[10]	Y											
	Z, ZZ											
5.0101" to 5.5100"	XX											
127.26mm to 139.95mm	X											
[11]	Y											
	Z, ZZ											
5.5101" to 6.0100"	XX											
139.96mm to 152.65mm	X											
[12]	Y											
	Z, ZZ											

Price Upon Request

Assemblies 3" and over will come on separate single-end handles

Blank Specs

Range	Handle No.	B Go Member	B NoGo Member
[01]	2 1/2	1.250	0.750
[02]	3 1/2	1.375	0.750
[03]	4 1/2	1.500	0.750
[04]	5 1/2	1.875	0.875
[05]	6	2.000	0.875
[06] [07]	7	2.000	1.000
[08] [09] [10] [11] [12]	7	2.125	1.000

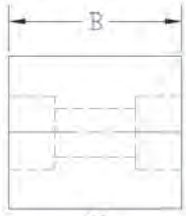

GO

NoGo

Chrome Plated Tools Steel - Add 50% to Steel Price

QTY DISCOUNTS - 2pcs. & Up... Less 10% - Combine identical sizes for quantity Discount *(Excludes Class XX products)*

Custom Progressive Gages from .1501" to 1.5100"

QUICK GO/NOGO CHECKING

When you want to check parts quickly, Progressive Plug Gages are your best choice. You can inspect parts in one operation because both the Go and NoGo diameters are stepped on a single gage member. Members are securely attached to a taperlock handle. Custom Plug Gage assemblies can be marked with your tool number. Go/NoGo assemblies include 1 line (up to 25 characters) of custom marking. These Progressive Plug Gages are available up to 1.5100" in most class tolerances to meet your unique requirements.

- ***Class X, Y, Z or ZZ***
- ***See page 116 for tolerance specifications***
- ***Go, NoGo tolerances***
- ***NIST traceable***
- ***Tool Steel; 60/62 Rc (Cold Stabilized)***
- ***Chrome Plated Tool Steel; 70/72 Rc***
- ***4 microinch finish or better on Class X***
- ***Up to 1.5100" – Taperlock style***
- ***Optional design: Custom Economy Step Gages, diameters up to 1" in Class Z or ZZ, see Custom Economy Step Gages on page 16***
- ***Handles custom marked 1 line (up to 25 characters) included, additional text quoted upon request***
- ***Inch handles – blue***
- ***Metric handles – yellow***
- ***Certificate of Accuracy included***
- ***See page 109 for Calibration Services***

How to Order:

20 _ _ ___ _ _ 0

Finish
[1] Tool Steel
[2] Chrome Plated Tool Steel

Tolerance
[2] Class X
[3] Class Y
[4] Class Z
[5] Class ZZ

Range

[02] .1501" to .2300"	[3.82mm to 5.84mm]
[03] .2301" to .3650"	[5.85mm to 9.27mm]
[04] .3651" to .5100"	[9.28mm to 12.95mm]
[05] .5101" to .8250"	[12.96mm to 20.95mm]
[06] .8251" to 1.1350"	[20.96mm to 28.83mm]
[07] 1.1351" to 1.5100"	[28.84mm to 38.35mm]

Direction of Tolerance
[1] Go / NoGo [1 member]

Package
[1] Member Only
[2] Single-End Assembly [1 member, SE Handle]

Size (Specify size of gage members)
Configure part number and add size of gage members.

Example: **201205120 - Go .5250" / NoGo 5252"**
Handle Marking:
(up to 25 characters included at no charge)

Custom Progressive Gages from .1501" to 1.5100"

		Steel			Blank Specs		
Range	**Tolerance Class**	**Member Only**	**Single-End Assembly**	**Handle No.**	**B Dimension**	**G Dimension**	**F Dimension**
.1501" to .2300"	X	$116.00	$132.00	0	.8125	.4062	.2812
3.82mm to 5.84mm	Y	$109.00	$125.00	0	.8125	.4062	.2812
[02]	Z, ZZ	$102.00	$118.00	0	.8125	.4062	.2812
.2301" to .3650"	X	$123.00	$139.00	1	1.1875	.750	.3125
5.85mm to 9.27mm	Y	$116.00	$132.00	1	1.1875	.750	.3125
[03]	Z, ZZ	$102.00	$118.00	1	1.1875	.750	.3125
.3651" to .5100"	X	$128.00	$144.00	2	1.500	1.000	.500
9.28mm to 12.95mm	Y	$116.00	$132.00	2	1.500	1.000	.500
[04]	Z, ZZ	$109.00	$125.00	2	1.500	1.000	.500
.5101" to .8250"	X	$128.00	$144.00	3	1.875	1.250	.500
12.96mm to 20.95mm	Y	$123.00	$139.00	3	1.875	1.250	.500
[05]	Z, ZZ	$116.00	$132.00	3	1.875	1.250	.500
.8251" to 1.1350"	X	$142.00	$159.25	4	2.125	1.375	.625
20.96mm to 28.83mm	Y	$135.00	$152.25	4	2.125	1.375	.625
[06]	Z, ZZ	$128.00	$145.25	4	2.125	1.375	.625
1.1351" to 1.5100"	X	$160.00	$178.50	5	2.375	1.500	.750
28.84mm to 38.35mm	Y	$141.00	$159.50	5	2.375	1.500	.750
[07]	Z, ZZ	$128.00	$146.50	5	2.375	1.500	.750

Chrome Plated Tool Steel - Add 50% to Steel price.

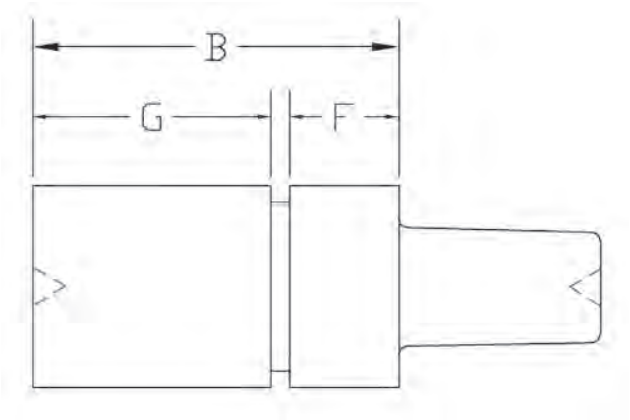

TAPERLOCK STYLE UP TO 1.5100"

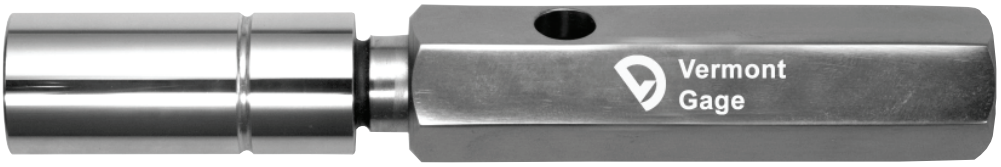

Custom Hex Gages

INSPECT HEX HEADS

Hex Gages are perfect for inspecting machine head fasteners. Go/NoGo Hex Plug Gages are manufactured to ASME B107.17M and ASME B18.3. Special diameter hex gages are also available.

Hex Plug assemblies can be marked with your tool number. Go/NoGo assemblies include 1 line (up to 25 characters) of custom marking.

- ***ASME B107.17 (Inch & Metric)***
- ***ASME B18.3 (Inch)***
- ***ASME B18.3.1M (1.50 - 24.00mm)***
- ***Go, NoGo tolerances***
- ***NIST traceable***
- ***Tool Steel; 60/62 Rc***
- ***Custom Square, Rectangular & other shapes available***
- ***Handles custom marked 1 line (up to 25 characters) included, additional text quoted upon request***
- ***See page 111 for Calibration Services***

ASME B18.3

Size	Part No.	Price
Inch		
.028"	**212101030**	$420.00
.035"	**212102030**	$396.00
.050"	**212103030**	$350.00
1/16"	**212104030**	$350.00
5/64"	**212105030**	$350.00
3/32"	**212106030**	$350.00
7/64"	**212107030**	$350.00
1/8"	**212108030**	$302.00
9/64"	**212109030**	$302.00
5/32"	**212110030**	$302.00
3/16"	**212111030**	$302.00
7/32"	**212112030**	$302.00
1/4"	**212113030**	$302.00
5/16"	**212114030**	$315.00
3/8"	**212115030**	$332.00
7/16"	**212116030**	$332.00
1/2"	**212117030**	$332.00
9/16"	**212118030**	$356.00
5/8"	**212119030**	$356.00
3/4"	**212120030**	$372.00
7/8"	**212121030**	$408.00
1"	**212122030**	$450.00
Metric		
1.50mm	**212204030**	$350.00
2.00mm	**212205030**	$350.00
2.50mm	**212206030**	$350.00
3.00mm	**212207030**	$302.00
4.00mm	**212208030**	$302.00
5.00mm	**212209030**	$302.00
6.00mm	**212210030**	$302.00
8.00mm	**212211030**	$302.00
10.00mm	**212212030**	$315.00
12.00mm	**212213030**	$332.00
14.00mm	**212214030**	$332.00
17.00mm	**212215030**	$356.00
19.00mm	**212216030**	$372.00
22.00mm	**212217030**	$408.00
24.00mm	**212218030**	$450.00

Prices are for complete Go/NoGo Double-End Assemblies.

Custom Hex Gages

ASME B107.17M

Size	Part No.	Price	Size	Part No.	Price	Size	Part No.	Price
Inch								
1/8"	**211101030**	$325.00	25/32"	**211120030**	$380.00	1 15/16"	**211139030**	$672.00
5/32"	**211102030**	$325.00	13/16"	**211121030**	$380.00	2"	**211140030**	$672.00
3/16"	**211103030**	$325.00	7/8"	**211122030**	$380.00	2 1/16"	**211141030**	$672.00
13/64"	**211104030**	$325.00	15/16"	**211123030**	$380.00	2 1/8"	**211142030**	$672.00
7/32"	**211105030**	$325.00	1"	**211124030**	$380.00	2 3/16"	**211143030**	$708.00
15/64"	**211106030**	$325.00	1 1/16"	**211125030**	$430.00	2 1/4"	**211144030**	$708.00
1/4"	**211107030**	$325.00	1 1/8"	**211126030**	$430.00	2 5/16"	**211145030**	$708.00
9/32"	**211108030**	$335.00	1 3/16"	**211127030**	$430.00	2 3/8"	**211146030**	$708.00
5/16"	**211109030**	$335.00	1 1/4"	**211128030**	$430.00	2 7/16"	**211147030**	$742.00
11/32"	**211110030**	$335.00	1 5/16"	**211129030**	$474.00	2 1/2"	**211148030**	$742.00
3/8"	**211111030**	$335.00	1 3/8"	**211130030**	$520.00	2 9/16"	**211149030**	$742.00
7/16"	**211112030**	$335.00	1 7/16"	**211131030**	$566.00	2 5/8"	**211150030**	$742.00
1/2"	**211113030**	$335.00	1 1/2"	**211132030**	$575.00	2 11/16"	**211151030**	$742.00
9/16"	**211114030**	$335.00	1 9/16"	**211133030**	$575.00	2 3/4"	**211152030**	$870.00
19/32"	**211115030**	$335.00	1 5/8"	**211134030**	$575.00	2 13/16"	**211153030**	$870.00
5/8"	**211116030**	$352.00	1 11/16"	**211135030**	$575.00	2 7/8"	**211154030**	$870.00
21/32"	**211117030**	$352.00	1 3/4"	**211136030**	$575.00	2 15/16"	**211155030**	$870.00
11/16"	**211118030**	$352.00	1 13/16"	**211137030**	$672.00	3"	**211156030**	$870.00
3/4"	**211119030**	$352.00	1 7/8"	**211138030**	$672.00			
Metric								
2mm	**211201030**	$330.00	18mm	**211220030**	$355.00	37mm	**211239030**	$572.00
3mm	**211202030**	$330.00	19mm	**211221030**	$380.00	38mm	**211240030**	$572.00
3.2mm	**211203030**	$325.00	20mm	**211222030**	$380.00	39mm	**211241030**	$572.00
4mm	**211204030**	$325.00	21mm	**211223030**	$380.00	40mm	**211242030**	$572.00
5mm	**211205030**	$325.00	22mm	**211224030**	$380.00	41mm	**211243030**	$572.00
5.5mm	**211206030**	$325.00	23mm	**211225030**	$380.00	42mm	**211244030**	$572.00
6mm	**211207030**	$325.00	24mm	**211226030**	$380.00	43mm	**211245030**	$572.00
6.3mm	**211208030**	$325.00	25mm	**211227030**	$380.00	44mm	**211246030**	$672.00
7mm	**211209030**	$335.00	26mm	**211228030**	$430.00	45mm	**211247030**	$672.00
8mm	**211210030**	$335.00	27mm	**211229030**	$430.00	46mm	**211248030**	$672.00
9mm	**211211030**	$335.00	28mm	**211230030**	$430.00	47mm	**211249030**	$672.00
10mm	**211212030**	$335.00	29mm	**211231030**	$430.00	48mm	**211250030**	$672.00
11mm	**211213030**	$335.00	30mm	**211232030**	$430.00	49mm	**211251030**	$672.00
12mm	**211214030**	$335.00	31mm	**211233030**	$430.00	50mm	**211252030**	$672.00
13mm	**211215030**	$335.00	32mm	**211234030**	$474.00	55mm	**211253030**	$710.00
14mm	**211216030**	$335.00	33mm	**211235030**	$474.00	60mm	**211254030**	$710.00
15mm	**211217030**	$335.00	34mm	**211236030**	$525.00	65mm	**211255030**	$748.00
16mm	**211218030**	$355.00	35mm	**211237030**	$525.00	70mm	**211256030**	$870.00
17mm	**211219030**	$355.00	36mm	**211238030**	$566.00	75mm	**211257030**	$870.00

Prices are for complete Go/NoGo Double-End Assemblies.

Custom Steel & Chrome Ring Gages from .0600" to 12.2600"

FOR MASTERS & GO/NOGO GAGING

Ring Gages are perfect for use as masters for bore gages and internal micrometers. Use Vermont Gage Ring Gages to efficiently inspect external dimensions of manufactured parts. With a Go and NoGo ring, an inspector can quickly pass/fail parts without taking time-consuming readings from an indicator. A Certificate of Accuracy accompanies every ring gage assuring size.

- ***Class XX, X, Y, Z or ZZ***
- ***See page 116 for tolerance specifications***
- ***Go, NoGo or Master tolerances***
- ***NIST traceable***
- ***Tool Steel; 60/62 Rc (Cold Stabilized)***
- ***Chrome Plated Tool Steel; 70/72 Rc***
- ***Lapped to 4 microinch finish or better on Class XX or X***
- ***Round within 1/2 of tolerance***
- ***Marked with size and direction of tolerance***
- ***Special Marking Available***
- ***Certificate of Accuracy included***
- ***See page 109 for Calibration Services***

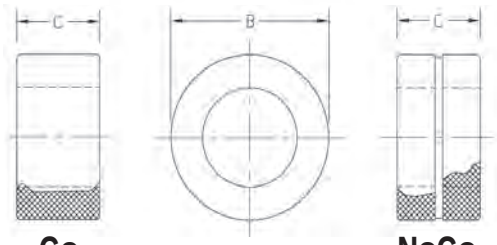

Go **NoGo**

How to Order:

23 _ _ ___ _ _0

Material
[1] Tool Steel
[2] Chrome Plated Tool Steel

Tolerance
[1] Class XX
[2] Class X
[3] Class Y
[4] Class Z
[5] Class ZZ

Range

[01] .0600" to .0700"	[1.52mm to 1.78mm]
[02] .0701" to .1500"	[1.79mm to 3.81mm]
[03] .1501" to .2300"	[3.82mm to 5.84mm]
[04] .2301" to .3650"	[5.85mm to 9.27mm]
[05] .3651" to .5100"	[9.28mm to 12.95mm]
[06] .5101" to .8250"	[12.96mm to 20.95mm]
[07] .8251" to 1.1350"	[20.96mm to 28.83mm]
[08] 1.1351" to 1.5100"	[28.84mm to 38.35mm]
[09] 1.5101" to 2.0100"	[38.36mm to 51.05mm]
[10] 2.0101" to 2.5100"	[51.06mm to 63.75mm]
[11] 2.5101" to 3.0100"	[63.76mm to 76.45mm]
[12] 3.0101" to 3.5100"	[76.46mm to 89.15mm]
[13] 3.5101" to 4.0100"	[89.16mm to 101.85mm]
[14] 4.0101" to 4.7600"	[101.86mm to 120.90mm]
[15] 4.7601" to 5.5100"	[120.91mm to 139.85mm]
[16] 5.5101" to 6.2600"	[139.86mm to 159.00mm]
[17] 6.2601" to 7.0100"	[159.01mm to 178.05mm]
[18] 7.0101" to 7.7600"	[178.06mm to 197.10mm]
[19] 7.7601" to 8.5100"	[197.11mm to 216.15mm]
[20] 8.5101" to 9.2600"	[216.16mm to 235.20mm]
[21] 9.2601" to 10.0100"	[235.21mm to 254.25mm]
[22] 10.0101" to 10.7600"	[254.26mm to 273.30mm]
[23] 10.7601" to 11.5100"	[273.31mm to 292.35mm]
[24] 11.5101" to 12.2600"	[292.36mm to 311.40mm]

Direction of Tolerance
[1] Go [1 member, (Minus) unilateral tolerance]
[2] NoGo [1 member, (Plus) unilateral tolerance]
[3] Master [1 member, bilateral tolerance]

Package
[1] Member Only

Size (Specify size of gage members)

When ordering, configure part number and add size of gage member.

Example: **231204310 - .2500"**

Custom Steel & Chrome Ring Gages from .0600" to 12.2600"

Range	Tolerance Class	Member Only	Blank No.	C Dim.	B Dim.
.0600" to .0700"	XX	$280.00	00	3/16"	15/16"
1.52mm to 1.78mm	X	$240.00	00	3/16"	15/16"
(Chrome not available)	Y	$226.00	00	3/16"	15/16"
[01]	Z, ZZ	$200.00	00	3/16"	15/16"
.0701" to .1500"	XX	$246.00	00	3/16"	15/16"
1.79mm to 3.81mm	X	$194.00	00	3/16"	15/16"
(Chrome not available)	Y	$188.00	00	3/16"	15/16"
[02]	Z, ZZ	$182.00	00	3/16"	15/16"
.1501" to .2300"	XX	$187.00	0	3/8"	15/16"
3.82mm to 5.84mm	X	$163.00	0	3/8"	15/16"
[03]	Y	$152.00	0	3/8"	15/16"
	Z, ZZ	$140.00	0	3/8"	15/16"
.2301" to .3650"	XX	$170.00	1	9/16"	1-1/8"
5.85mm to 9.27mm	X	$145.00	1	9/16"	1-1/8"
[04]	Y	$135.00	1	9/16"	1-1/8"
	Z, ZZ	$125.00	1	9/16"	1-1/8"
.3651" to .5100"	XX	$172.00	2	3/4"	1-3/8"
9.28mm to 12.95mm	X	$145.00	2	3/4"	1-3/8"
[05]	Y	$135.00	2	3/4"	1-3/8"
	Z, ZZ	$125.00	2	3/4"	1-3/8"
.5101" to .8250"	XX	$177.00	3	15/16"	1-3/4"
12.96mm to 20.95mm	X	$155.00	3	15/16"	1-3/4"
[06]	Y	$142.00	3	15/16"	1-3/4"
	Z, ZZ	$130.00	3	15/16"	1-3/4"
.8251" to 1.1350"	XX	$179.00	4	1-1/8"	2-1/8"
20.96mm to 28.83mm	X	$159.00	4	1-1/8"	2-1/8"
[07]	Y	$144.00	4	1-1/8"	2-1/8"
	Z, ZZ	$134.00	4	1-1/8"	2-1/8"
1.1351" to 1.5100"	XX	$208.00	5	1-5/16"	2-1/2"
28.84mm to 38.35mm	X	$178.00	5	1-5/16"	2-1/2"
[08]	Y	$165.00	5	1-5/16"	2-1/2"
	Z, ZZ	$153.00	5	1-5/16"	2-1/2"
1.5101" to 2.0100"	XX	$254.00	6	1-1/2"	4"
38.36mm to 51.05mm	X	$224.00	6	1-1/2"	4"
[09]	Y	$205.00	6	1-1/2"	4"
	Z, ZZ	$193.00	6	1-1/2"	4"
2.0101" to 2.5100"	XX	$325.00	7	1-1/2"	4-1/2"
51.06mm to 63.75mm	X	$285.00	7	1-1/2"	4-1/2"
[10]	Y	$248.00	7	1-1/2"	4-1/2"
	Z, ZZ	$227.00	7	1-1/2"	4-1/2"
2.5101" to 3.0100"	XX	$354.00	8	1-1/2"	5"
63.76mm to 76.45mm	X	$310.00	8	1-1/2"	5"
[11]	Y	$278.00	8	1-1/2"	5"
	Z, ZZ	$258.00	8	1-1/2"	5"
3.0101" to 3.5100"	XX	$435.00	9	1-1/2"	5-1/2"
76.46mm to 89.15mm	X	$370.00	9	1-1/2"	5-1/2"
[12]	Y	$324.00	9	1-1/2"	5-1/2"
	Z, ZZ	$295.00	9	1-1/2"	5-1/2"

Range	Tolerance Class	Member Only	Blank No.	C Dim.	B Dim.
3.5101" to 4.0100"	XX	$494.00	10	1-1/2"	6-1/4"
89.16mm to 101.85mm	X	$415.00	10	1-1/2"	6-1/4"
[13]	Y	$362.00	10	1-1/2"	6-1/4"
	Z, ZZ	$341.00	10	1-1/2"	6-1/4"
4.0101" to 4.7600"	XX	$570.00	11	1-1/2"	7-1/4"
101.86mm to 120.90mm	X	$492.00	11	1-1/2"	7-1/4"
[14]	Y	$427.00	11	1-1/2"	7-1/4"
	Z, ZZ	$398.00	11	1-1/2"	7-1/4"
4.7601" to 5.5100"	XX	$741.00	12	1-1/2"	8-1/4"
120.91mm to 139.85mm	X	$636.00	12	1-1/2"	8-1/4"
[15]	Y	$552.00	12	1-1/2"	8-1/4"
	Z, ZZ	$537.00	12	1-1/2"	8-1/4"
5.5101" to 6.2600"	XX	$858.00	13	1-1/2"	9-1/4"
139.86mm to 159.00mm	X	$741.00	13	1-1/2"	9-1/4"
[16]	Y	$644.00	13	1-1/2"	9-1/4"
	Z, ZZ	$620.00	13	1-1/2"	9-1/4"
6.2601" to 7.0100"	XX	$1,040.00	14	1-1/2"	10-1/4"
159.01mm to 178.05mm	X	$945.00	14	1-1/2"	10-1/4"
[17]	Y	$888.00	14	1-1/2"	10-1/4"
	Z, ZZ	$870.00	14	1-1/2"	10-1/4"
7.0101" to 7.7600"	XX	$1,205.00	15	1-1/2"	11-1/4"
178.06mm to 197.10mm	X	$1,038.00	15	1-1/2"	11-1/4"
[18]	Y	$980.00	15	1-1/2"	11-1/4"
	Z, ZZ	$932.00	15	1-1/2"	11-1/4"
7.7601" to 8.5100"	XX	$1,330.00	16	1-1/2"	12-1/4"
197.11mm to 216.15mm	X	$1,266.00	16	1-1/2"	12-1/4"
[19]	Y	$1,185.00	16	1-1/2"	12-1/4"
	Z, ZZ	$1,150.00	16	1-1/2"	12-1/4"
8.5101" to 9.2600"	XX	$1,585.00	17	1-1/2"	13-1/4"
216.16mm to 235.20mm	X	$1,448.00	17	1-1/2"	13-1/4"
[20]	Y	$1,366.00	17	1-1/2"	13-1/4"
	Z, ZZ	$1,160.00	17	1-1/2"	13-1/4"
9.2601" to 10.0100"	XX	$1,785.00	18	1-1/2"	14-1/4"
235.21mm to 254.25mm	X	$1,522.00	18	1-1/2"	14-1/4"
[21]	Y	$1,415.00	18	1-1/2"	14-1/4"
	Z, ZZ	$1,300.00	18	1-1/2"	14-1/4"
10.0101" to 10.7600"	XX	Price Upon Request			
254.26mm to 273.30mm	X				
[22]	Y				
	Z, ZZ				
10.7601" to 11.5100"	XX				
273.31mm to 292.35mm	X				
[23]	Y				
	Z, ZZ				
11.5101" to 12.2600"	XX				
292.36mm to 311.40mm	X				
[24]	Y				
	Z, ZZ				

Chrome Plated Tool Steel - Add 50% to Steel Price

QTY DISCOUNTS - 2pcs. & Up... Less 10%

Combine identical sizes for quantity discount. *(Excludes Class XX Products.)*

Custom Carbide Ring Gages from .0600" to 1.5100"

FOR MASTERS & GO/NOGO GAGING

Carbide Ring Gages are perfect for use as masters for bore gages and internal micrometers. The high wear resistance of the carbide material extends the gage life. Use Vermont Gage Ring Gages to efficiently inspect external dimensions of manufactured parts. With a Go and NoGo ring, an inspector can quickly pass/fail parts without taking time-consuming readings from an indicator. A Certificate of Accuracy accompanies every ring gage assuring size.

- ***Class XX, X, Y, Z or ZZ***
- ***See page 116 for tolerance specifications***
- ***Go, NoGo or Master tolerances***
- ***NIST traceable***
- ***C-2 Tungsten Carbide; 90/92 Ra***
- ***Lapped to 2 microinch finish or better on Class XX or X***
- ***Round within 1/2 of tolerance***
- ***Marked with size and direction of tolerance***
- ***Certificate of Accuracy included***
- ***See page 109 for Calibration Services***

How to Order:

23 _ _ _ _ _ 0

Material
[3] Carbide

Tolerance
[1] Class XX
[2] Class X
[3] Class Y
[4] Class Z
[5] Class ZZ

Range

[01] .0600" to .0700"	[1.52mm to 1.78mm]
[02] .0701" to .1500"	[1.79mm to 3.81mm]
[03] .1501" to .2300"	[3.82mm to 5.84mm]
[04] .2301" to .3650"	[5.85mm to 9.27mm]
[05] .3651" to .5100"	[9.28mm to 12.95mm]
[06] .5101" to .8250"	[12.96mm to 20.95mm]
[07] .8251" to 1.1350"	[20.96mm to 28.83mm]
[08] 1.1351" to 1.3350"	[28.84mm to 33.91mm]
[09] 1.3351" to 1.5100"	[33.92mm to 38.35mm]

Direction of Tolerance
[1] Go [1 member, (Minus) unilateral tolerance]
[2] NoGo [1 member, (Plus) unilateral tolerance]
[3] Master [1 member, bilateral tolerance]

Package
[1] Member Only

Size (Specify size of gage members)

When ordering, configure part number and add size of gage member.

Example: **233204310 - .2500"**

Custom Carbide Ring Gages from .0600" to 1.5100"

Range	Tolerance Class	Member Only	Blank No.	C Dim.	B Dim.
.0600" to .0700"	XX	$335.00	00	3/16"	15/16"
1.52mm to 1.78mm	X	$276.00	00	3/16"	15/16"
[01]	Y	$265.00	00	3/16"	15/16"
	Z, ZZ	$248.00	00	3/16"	15/16"
.0701" to .1500"	XX	$335.00	00	3/16"	15/16"
1.79mm to 3.81mm	X	$276.00	00	3/16"	15/16"
[02]	Y	$265.00	00	3/16"	15/16"
	Z, ZZ	$248.00	00	3/16"	15/16"
.1501" to .2300"	XX	$305.00	0	3/8"	15/16"
3.82mm to 5.84mm	X	$265.00	0	3/8"	15/16"
[03]	Y	$258.00	0	3/8"	15/16"
	Z, ZZ	$242.00	0	3/8"	15/16"
.2301" to .3650"	XX	$300.00	1	9/16"	1-1/8"
5.85mm to 9.27mm	X	$254.00	1	9/16"	1-1/8"
[04]	Y	$242.00	1	9/16"	1-1/8"
	Z, ZZ	$230.00	1	9/16"	1-1/8"
.3651" to .5100"	XX	$315.00	2	3/4"	1-3/8"
9.28mm to 12.95mm	X	$292.00	2	3/4"	1-3/8"
[05]	Y	$272.00	2	3/4"	1-3/8"
	Z, ZZ	$258.00	2	3/4"	1-3/8"
.5101" to .8250"	XX	$335.00	3	15/16"	1-3/4"
12.96mm to 20.95mm	X	$312.00	3	15/16"	1-3/4"
[06]	Y	$305.00	3	15/16"	1-3/4"
	Z, ZZ	$295.00	3	15/16"	1-3/4"
.8251" to 1.1350"	XX	$500.00	4	1-1/8"	2-1/8"
20.96mm to 28.83mm	X	$455.00	4	1-1/8"	2-1/8"
[07]	Y	$443.00	4	1-1/8"	2-1/8"
	Z, ZZ	$437.00	4	1-1/8"	2-1/8"
1.1351" to 1.3350"	XX	$600.00	5	1-5/16"	2-1/2"
28.84mm to 33.91mm	X	$558.00	5	1-5/16"	2-1/2"
[08]	Y	$518.00	5	1-5/16"	2-1/2"
	Z, ZZ	$502.00	5	1-5/16"	2-1/2"
1.3351" to 1.5100"	XX	$640.00	5	1-5/16"	2-1/2"
33.92mm to 38.35mm	X	$598.00	5	1-5/16"	2-1/2"
[09]	Y	$564.00	5	1-5/16"	2-1/2"
	Z, ZZ	$535.00	5	1-5/16"	2-1/2"

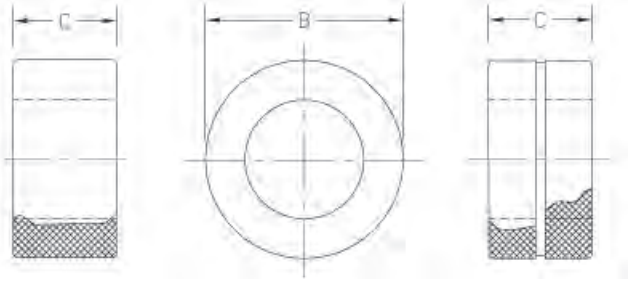

Go **NoGo**

Custom Master Setting Discs from .1500" to 8.0100"

CALIBRATE YOUR MEASURING EQUIPMENT

Use these Vermont Gage Master Setting Discs to calibrate your measuring equipment. Designed to satisfy traceability requirements of your quality control system, these masters are a must for your calibration lab and inspection areas. Vermont Master Setting Discs are available in three (3) styles and come complete with grips and Certificate of Accuracy.

- ***Class XX, X or Y***
- ***See page 116 for tolerance specifications***
- ***Bilateral (+/-) tolerance***
- ***NIST traceable***
- ***Tool Steel; 60/62 Rc (Cold Stabilized)***
- ***Chrome Plated Tool Steel; 70/72 Rc***
- ***4 microinch finish or better on Class XX or X***
- ***Round within 1/2 of tolerance***
- ***Complete with end grips***
- ***Marked with size and direction of tolerance on Master Setting Discs over 1.5100"***
- ***Certificate of Accuracy included***
- ***See page 109 for Calibration Services***

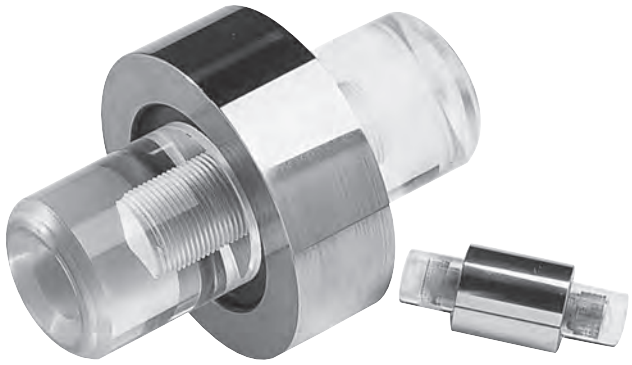

How to Order:

25 _ _ __ _ _0

Material
[1] Tool Steel
[2] Chrome Plated Tool Steel

Tolerance
[1] Class XX
[2] Class X
[3] Class Y

Range

[01] .1500" to .2300"	[3.81mm to 5.84mm]
[02] .2301" to .3650"	[5.85mm to 9.27mm]
[03] .3651" to .5100"	[9.28mm to 12.95mm]
[04] .5101" to .8250"	[12.96mm to 20.95mm]
[05] .8251" to 1.1350"	[20.96mm to 28.83mm]
[06] 1.1351" to 1.5100"	[28.84mm to 38.35mm]
[07] 1.5101" to 2.0100"	[38.36mm to 51.05mm]
[08] 2.0101" to 2.5100"	[51.06mm to 63.75mm]
[09] 2.5101" to 3.0100"	[63.76mm to 76.45mm]
[10] 3.0101" to 3.5100"	[76.46mm to 89.15mm]
[11] 3.5101" to 4.0100"	[89.16mm to 101.85mm]
[12] 4.0101" to 4.5100"	[101.86mm to 114.55mm]
[13] 4.5101" to 5.0100"	[114.56mm to 127.75mm]
[14] 5.0101" to 5.5100"	[127.76mm to 139.95mm]
[15] 5.5101" to 6.0100"	[139.96mm to 152.65mm]
[16] 6.0101" to 6.5100"	[152.66mm to 165.35mm]
[17] 6.5101" to 7.0100"	[165.36mm to 178.05mm]
[18] 7.0101" to 7.5100"	[178.06mm to 190.75mm]
[19] 7.5101" to 8.0100"	[190.76mm to 203.45mm]

Direction of Tolerance
[1] Master [1 member, bilateral tolerance]
[2] Go [1 member, (Plus) unilateral tolerance]
[3] NoGo [1 member, (Minus) unilateral tolerance]

Package
[1] Style I Master Disc with End Grips
[2] Style II Master Disc with End Grips
[3] Style III Master Disc with End Grips

Size (Specify size of gage members)

When ordering, configure part number and add size of gage member.

Example: **251204310 - .6250"**

Custom Master Setting Discs from .1500" to 8.0100"

Range	Tolerance Class	Style 1	Style 2	Style 3
.1500" to .2300"	XX	$135.00	$245.00	$124.00
3.81mm to 5.84mm	X	$116.00	$195.00	$97.00
[01]	Y	$107.00	$187.00	$85.00
.2301" to .3650"	XX	$135.00	$245.00	$124.00
5.85mm to 9.27mm	X	$116.00	$195.00	$97.00
[02]	Y	$107.00	$187.00	$85.00
.3651" to .5100"	XX	$141.00	$249.00	$121.00
9.28mm to 12.95mm	X	$116.00	$204.00	$103.00
[03]	Y	$107.00	$194.00	$95.00
.5101" to .8250"	XX	$141.00	$262.00	$129.00
12.96mm to 20.95mm	X	$123.00	$218.00	$110.00
[04]	Y	$116.00	$200.00	$95.00
.8251" to 1.1350"	XX	$155.00	$270.00	$135.00
20.96mm to 28.83mm	X	$130.00	$231.00	$116.00
[05]	Y	$121.00	$206.00	$107.00
1.1351" to 1.5100"	XX	$165.00	$286.00	$141.00
28.84mm to 38.35mm	X	$137.00	$242.00	$121.00
[06]	Y	$128.00	$230.00	$116.00
1.5101" to 2.0100"	XX	$183.00	$303.00	$170.00
38.36mm to 51.05mm	X	$152.00	$267.00	$137.00
[07]	Y	$134.00	$242.00	$121.00
2.0101" to 2.5100"	XX	$214.00	$361.00	$194.00
51.06mm to 63.75mm	X	$171.00	$286.00	$158.00
[08]	Y	$152.00	$267.00	$140.00
2.5101" to 3.0100"	XX	$231.00	$396.00	$218.00
63.76mm to 76.45mm	X	$189.00	$339.00	$170.00
[09]	Y	$170.00	$303.00	$152.00
3.0101" to 3.5100"	XX	$311.00	$506.00	$291.00
76.46mm to 89.15mm	X	$267.00	$443.00	$242.00
[10]	Y	$242.00	$412.00	$231.00
3.5101" to 4.0100"	XX	$377.00	$553.00	$315.00
89.16mm to 101.85mm	X	$322.00	$498.00	$267.00
[11]	Y	$303.00	$443.00	$242.00
4.0101" to 4.5100"	XX	Price Upon Request		
101.86mm to 114.55mm	X			
[12]	Y			
4.5101" to 5.0100"	XX			
114.56mm to 127.75mm	X			
[13]	Y			

Chrome Plated Tool Steel - Add 50% to Steel price.

Custom Master Setting Discs from .1500" to 8.0100"

Range	Tolerance Class	Style 1	Style 2	Style 3
5.0101" to 5.5100" **127.76mm to 139.95mm** [14]	XX X Y			
5.5101" to 6.0100" **139.96mm to 152.65mm** [15]	XX X Y			
6.0101" to 6.5100" **152.66mm to 165.35mm** [16]	XX X Y			
6.5101" to 7.0100" **165.36mm to 178.05mm** [17]	XX X Y			
7.0101" to 7.5100" **178.06mm to 190.75mm** [18]	XX X Y			
7.5101" to 8.0100" **190.76mm to 203.45mm** [19]	XX X Y			

Price Upon Request

Chrome Plated Tool Steel - Add 50% to Steel price.

Range		Grip	C	A	C
Inch	**Metric**	**No.**	**Style 1**	**Style 2**	**Style 3**
.1500" to .2300"	**3.81mm to 5.84mm**	**0**	1 3/16"	1 3/16"	3/4"
.2301" to .3650"	**5.85mm to 9.27mm**	**1**	1 5/16"	1 5/16"	13/16"
.3651" to .5100"	**9.28mm to 12.95mm**	**2**	1 7/16"	1 7/16"	7/8"
.5101" to .8250"	**12.96mm to 20.95mm**	**3**	1 9/16"	1 9/16"	15/16"
.8251" to 1.1350"	**20.96mm to 28.83mm**	**4**	1 11/16"	1 11/16"	1"
1.1351" to 1.5100"	**28.84mm to 38.35mm**	**5**	1 15/16"	1 15/16"	1 1/18"
1.5101" to 2.0100"	**38.36mm to 51.05mm**	**6**	1 7/8"	7/8"	7/8"
2.0101" to 2.5100"	**51.06mm to 63.75mm**	**6**	2"	7/8"	7/8"
2.5101" to 3.5100"	**63.76mm to 89.15mm**	**7**	2"	1"	1"
3.5101" to 8.0100"	**89.16mm to 203.45mm**	**7**	2 1/8"	1"	1"

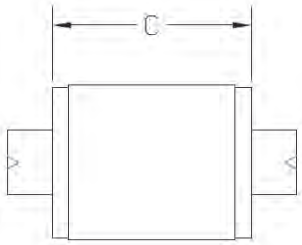

STYLE 1

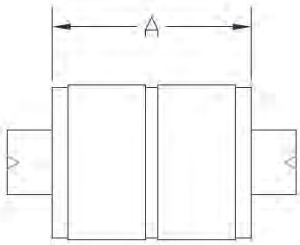

STYLE 2

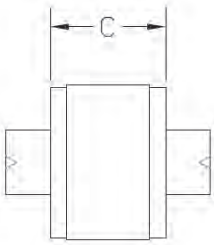

STYLE 3

Standard Flexible Hole Location Gages

THREADED HOLE LOCATION GAGES

Hole Location Plugs are used to measure the location of a threaded hole in a product, typically with a CMM.

Vermont Gage's Flexible Hole Location Plugs larger than #10 (M5) are slotted at 90 degree increments, while Hole Location Plugs #10 (M5) and smaller and are of solid construction with front taper covering the entire product tolerance. Both styles insure positive location on the thread flank regardless of the size of the hole within the product tolerance.

- ***For inspecting the location of a threaded hole***
- ***Slotted 90 degree design locates positively on flank of parts hole***
- ***Use to determine centerline to centerline distances of threaded holes***
- ***Cert of Accuracy included***
- ***Sizes #10 (M5) and smaller are of solid construction, with front taper to cover entire product tolerance***

INCH

Size	Part No.	Price
0-80 UNF	**261101000**	$160.00
1-64 UNC	**261102500**	$156.00
1-72 UNF	**261103500**	$156.00
2-56 UNC	**261105000**	$150.00
2-64 UNF	**261106000**	$150.00
3-48 UNC	**261107500**	$141.00
3-56 UNF	**261108500**	$141.00
4-40 UNC	**261110000**	$134.00
4-48 UNF	**261111000**	$134.00
5-40 UNC	**261112500**	$126.00
5-44 UNF	**261113500**	$126.00
6-32 UNC	**261115000**	$126.00
6-40 UNF	**261116000**	$126.00
8-32 UNC	**261117500**	$126.00
8-36 UNF	**261118500**	$126.00
10-24 UNC	**261120000**	$126.00
10-32 UNF	**261121000**	$126.00
12-24 UNC	**261122500**	$117.00
12-28 UNF	**261123500**	$117.00
1/4-20 UNC	**261126000**	$108.00
1/4-28 UNF	**261127000**	$108.00
5/16-18 UNC	**261129500**	$114.00
5/16-24 UNF	**261130500**	$114.00
3/8-16 UNC	**261133000**	$114.00
3/8-24 UNF	**261134000**	$114.00
7/16-14 UNC	**261136500**	$114.00
7/16-20 UNF	**261137500**	$114.00
1/2-13 UNC	**261140000**	$126.00
1/2-20 UNF	**261141000**	$126.00
9/16-12 UNC	**261143500**	$130.00
9/16-18 UNF	**261144500**	$130.00
5/8-11 UNC	**261147000**	$134.00
5/8-18 UNF	**261148000**	$134.00
3/4-10 UNC	**261152000**	$139.00
3/4-16 UNF	**261153000**	$139.00
7/8-9 UNC	**261157000**	$156.00
7/8-14 UNF	**261158000**	$156.00
1"-8 UNC	**261162000**	$214.00
1"-12 UNF	**261163000**	$214.00

METRIC

Size	Part No.	Price
M1.6 X 0.35	**262101000**	$182.00
M2.0 X 0.4	**262104000**	$178.00
M2.5 X 0.45	**262107000**	$178.00
M3.0 X 0.5	**262108500**	$162.00
M3.5 X 0.6	**262110000**	$162.00
M4.0 X 0.7	**262111500**	$152.00
M5.0 X 0.8	**262114500**	$152.00
M6.0 X 1.0	**262117500**	$126.00
M8.0 X 1.25	**262120500**	$126.00
M8.0 X 1.0	**262120000**	$126.00
M10.0 X 1.5	**262125500**	$137.00
M10.0 X 1.25	**262124500**	$137.00
M10.0 X 0.75	**262123500**	$160.00
M12.0 X 1.75	**262130500**	$143.00
M12.0 X 1.5	**262129500**	$143.00
M12.0 X 1.25	**262128500**	$143.00
M12.0 X 1.0	**262128000**	$150.00
M14.0 X 2.0	**262133000**	$156.00
M14.0 X 1.5	**262132000**	$156.00
M15.0 X 1.0	**262134500**	$156.00
M16.0 X 2.0	**262138000**	$156.00
M16.0 X 1.5	**262137000**	$156.00
M17.0 X 1.0	**262139500**	$162.00
M18.0 X 1.5	**262142000**	$162.00
M20.0 X 2.5	**262146500**	$162.00
M20.0 X 1.5	**262145500**	$162.00
M20.0 X 1.0	**262144500**	$173.00
M22.0 X 2.5	**262149000**	$179.00
M22.0 X 1.5	**262148000**	$179.00
M24.0 X 3.0	**262151500**	$204.00
M24.0 X 2.0	**262150500**	$204.00

Standard Thread Gages

WORK PLUGS, RINGS & SET PLUGS

Vermont Gage's Thread Gages inspect the pitch diameter and the functional thread for both internal and external threaded products. All stocked Thread Gages are made to Class X tolerances per ASME B1.2 (Unified Inch screw threads), ASME B18.29.1 (STI Inch Screw Threads) and ASME B1.16M (Metric M series screw threads). All Thread Gages are supplied with a Certificate of Accuracy. Work Plugs are stocked in 2B and 3B (Inch) or 6H (Metric) classes of fit. Rings and Setting Plugs are stocked in 2A and 3A (Inch) or 6g (Metric) classes of fit. Stocked Work Plugs are chrome plated. All Thread Gages are marked with nominal size, threads per inch (Inch) or pitch (Metric), class of fit and pitch diameters. One line of additional marking (up to 25 characters) may be included at no additional cost.

- ***Class of fit – Work Plugs 2B, 3B (Inch); 6H (Metric)***
- ***Class of fit – Rings and Set Plugs 2A, 3A (Inch), 6g (Metric)***
- ***Set Plugs are Class X on PD, W Tolerance on Lead and Flank Angles***
- ***NIST traceable***
- ***Work plugs, Reversibles and STI gages furnished in Chrome Plated Tool Steel, 70/72 Rc***
- ***Thread rings and setting plugs furnished in Tool Steel, 60/62 Rc***
- ***Handles custom marked 1 line (up to 25 characters) included, additional text quoted upon request***
- ***Inch handles – blue***
- ***Metric handles – yellow***
- ***Thread ring holders on page 105***
- ***Certificate of Accuracy included***
- ***"J" Series Threads availible***
- ***See page 111 for Calibration Services***

Standard Thread Gages

INCH	Part No. Go Member	Part No. NoGo Member	Price	Part No. Go/NoGo Set	Price	Gage length Go (Min)	Gage length NoGo (Min)	Pitch Diameters Go	Pitch Diameters NoGo	Handle No.
0-80 UNF										
Taperlock Plug 2B	**301101010**	**301101020**	$60.50	**301101040**	$138.25	1/4"	3/16"	0.0519	0.0542	000
Taperlock Plug 3B	**301101010**	**301101030**	$60.50	**301101050**	$138.25	1/4"	3/16"	0.0519	0.0536	000
Reversible Plug 2B	**311101010**	**311101020**	$96.00	**311101040**	$210.75	1/2"	1/2"	0.0519	0.0542	1W
Reversible Plug 3B	**311101010**	**311101030**	$96.00	**311101050**	$210.75	1/2"	1/2"	0.0519	0.0536	1W
Ring 2A	**361101010**	**361101030**	$200.00	**361101050**	$400.00	3/32"	3/32"	0.0514	0.0496	1T
Ring 3A	**361101020**	**361101040**	$200.00	**361101060**	$400.00	3/32"	3/32"	0.0519	0.0506	1T
Set Plug 2A	**371101010**	**371101030**	$119.00	**371101050**	$255.25	7/32"	7/32"	0.0514	0.0496	000
Set Plug 3A	**371101020**	**371101040**	$119.00	**371101060**	$255.25	7/32"	7/32"	0.0519	0.0506	000
1-64 UNC										
Taperlock Plug 2B	**301102510**	**301102520**	$60.50	**301102540**	$138.25	1/4"	3/16"	0.0629	0.0655	000
Taperlock Plug 3B	**301102510**	**301102530**	$60.50	**301102550**	$138.25	1/4"	3/16"	0.0629	0.0648	000
Reversible Plug 2B	**311102510**	**311102520**	$96.00	**311102540**	$210.75	1/2"	1/2"	0.0629	0.0655	1W
Reversible Plug 3B	**311102510**	**311102530**	$96.00	**311102550**	$210.75	1/2"	1/2"	0.0629	0.0648	1W
Ring 2A	**361102510**	**361102530**	$184.00	**361102550**	$368.00	3/32"	3/32"	0.0623	0.0603	1T
Ring 3A	**361102520**	**361102540**	$184.00	**361102560**	$368.00	3/32"	3/32"	0.0629	0.0614	1T
Set Plug 2A	**371102510**	**371102530**	$119.00	**371102550**	$255.25	7/32"	7/32"	0.0623	0.0603	000
Set Plug 3A	**371102520**	**371102540**	$119.00	**371102560**	$255.25	7/32"	7/32"	0.0629	0.0614	000
1-72 UNF										
Taperlock Plug 2B	**301103510**	**301103520**	$60.50	**301103540**	$138.25	1/4"	3/16"	0.0640	0.0665	000
Taperlock Plug 3B	**301103510**	**301103530**	$60.50	**301103550**	$138.25	1/4"	3/16"	0.0640	0.0659	000
Reversible Plug 2B	**311103510**	**311103520**	$96.00	**311103540**	$210.75	1/2"	1/2"	0.0640	0.0665	1W
Reversible Plug 3B	**311103510**	**311103530**	$96.00	**311103550**	$210.75	1/2"	1/2"	0.0640	0.0659	1W
Ring 2A	**361103510**	**361103530**	$184.00	**361103550**	$368.00	3/32"	3/32"	0.0634	0.0615	1T
Ring 3A	**361103520**	**361103540**	$184.00	**361103560**	$368.00	3/32"	3/32"	0.0640	0.0626	1T
Set Plug 2A	**371103510**	**371103530**	$119.00	**371103550**	$255.25	7/32"	7/32"	0.0634	0.0615	000
Set Plug 3A	**371103520**	**371103540**	$119.00	**371103560**	$255.25	7/32"	7/32"	0.0640	0.0626	000
2-56 UNC										
Taperlock Plug 2B	**301105010**	**301105020**	$60.50	**301105040**	$138.25	1/4"	3/16"	0.0744	0.0772	000
Taperlock Plug 3B	**301105010**	**301105030**	$60.50	**301105050**	$138.25	1/4"	3/16"	0.0744	0.0765	000
Reversible Plug 2B	**311105010**	**311105020**	$77.00	**311105040**	$172.75	5/8"	5/8"	0.0744	0.0772	2W
Reversible Plug 3B	**311105010**	**311105030**	$77.00	**311105050**	$172.75	5/8"	5/8"	0.0744	0.0765	2W
STI Plug 2B	**321105010**	**321105020**	$73.00	**321105040**	$162.00	5/16"	7/32"	0.0976	0.0996	00
STI Plug 3B	**321105010**	**321105030**	$73.00	**321105050**	$162.00	5/16"	7/32"	0.0976	0.0989	00
Ring 2A	**361105010**	**361105030**	$147.00	**361105050**	$294.00	3/32"	3/32"	0.0738	0.0717	1T
Ring 3A	**361105020**	**361105040**	$147.00	**361105060**	$294.00	3/32"	3/32"	0.0744	0.0728	1T
Set Plug 2A	**371105010**	**371105030**	$119.00	**371105050**	$255.25	7/32"	7/32"	0.0738	0.0717	000
Set Plug 3A	**371105020**	**371105040**	$119.00	**371105060**	$255.25	7/32"	7/32"	0.0744	0.0728	000
2-64 UNF										
Taperlock Plug 2B	**301106010**	**301106020**	$60.50	**301106040**	$138.25	1/4"	3/16"	0.0759	0.0786	000
Taperlock Plug 3B	**301106010**	**301106030**	$60.50	**301106050**	$138.25	1/4"	3/16"	0.0759	0.0779	000
Reversible Plug 2B	**311106010**	**311106020**	$77.00	**311106040**	$172.75	5/8"	5/8"	0.0759	0.0786	2W
Reversible Plug 3B	**311106010**	**311106030**	$77.00	**311106050**	$172.75	5/8"	5/8"	0.0759	0.0779	2W
Ring 2A	**361106010**	**361106030**	$147.00	**361106050**	$294.00	3/32"	3/32"	0.0753	0.0733	1T
Ring 3A	**361106020**	**361106040**	$147.00	**361106060**	$294.00	3/32"	3/32"	0.0759	0.0744	1T
Set Plug 2A	**371106010**	**371106030**	$119.00	**371106050**	$255.25	7/32"	7/32"	0.0753	0.0733	000
Set Plug 3A	**371106020**	**371106040**	$119.00	**371106060**	$255.25	7/32"	7/32"	0.0759	0.0744	000
3-48 UNC										
Taperlock Plug 2B	**301107510**	**301107520**	$53.00	**301107540**	$123.25	1/4"	3/16"	0.0855	0.0885	000
Taperlock Plug 3B	**301107510**	**301107530**	$53.00	**301107550**	$123.25	1/4"	3/16"	0.0855	0.0877	000
Reversible Plug 2B	**311107510**	**311107520**	$76.00	**311107540**	$170.75	5/8"	5/8"	0.0855	0.0885	2W
Reversible Plug 3B	**311107510**	**311107530**	$76.00	**311107550**	$170.75	5/8"	5/8"	0.0855	0.0877	2W
STI Plug 2B	**321107510**	**321107520**	$70.50	**321107540**	$158.25	5/16"	7/32"	0.1126	0.1148	00
STI Plug 3B	**321107510**	**321107530**	$70.50	**321107550**	$158.25	5/16"	7/32"	0.1126	0.1140	00
Ring 2A	**361107510**	**361107530**	$148.00	**361107550**	$296.00	5/32"	5/32"	0.0848	0.0825	1T
Ring 3A	**361107520**	**361107540**	$148.00	**361107560**	$296.00	5/32"	5/32"	0.0855	0.0838	1T
Set Plug 2A	**371107510**	**371107530**	$110.00	**371107550**	$237.25	3/8"	3/8"	0.0848	0.0825	000
Set Plug 3A	**371107520**	**371107540**	$110.00	**371107560**	$237.25	3/8"	3/8"	0.0855	0.0838	000

"J" Series threads availible upon request

Standard Thread Gages

INCH	Part No. Go Member	Part No. NoGo Member	Price	Part No. Go/NoGo Set	Price	Gage length Go (Min)	Gage length NoGo (Min)	Pitch Diameters Go	Pitch Diameters NoGo	Handle No.
3-56 UNF										
Taperlock Plug 2B	**301108510**	**301108520**	$53.00	**301108540**	$123.25	1/4"	3/16"	0.0874	0.0902	000
Taperlock Plug 3B	**301108510**	**301108530**	$53.00	**301108550**	$123.25	1/4"	3/16"	0.0874	0.0895	000
Reversible Plug 2B	**311108510**	**311108520**	$76.00	**311108540**	$170.75	5/8"	5/8"	0.0874	0.0902	2W
Reversible Plug 3B	**311108510**	**311108530**	$76.00	**311108550**	$170.75	5/8"	5/8"	0.0874	0.0895	2W
STI Plug 2B	**321108510**	**321108520**	$71.00	**321108540**	$158.00	5/16"	7/32"	0.1106	0.1126	00
STI Plug 3B	**321108510**	**321108530**	$71.00	**321108550**	$158.00	5/16"	7/32"	0.1106	0.1119	00
Ring 2A	**361108510**	**361108530**	$148.00	**361108550**	$296.00	5/32"	5/32"	0.0867	0.0845	1T
Ring 3A	**361108520**	**361108540**	$148.00	**361108560**	$296.00	5/32"	5/32"	0.0874	0.0858	1T
Set Plug 2A	**371108510**	**371108530**	$110.00	**371108550**	$237.25	3/8"	3/8"	0.0867	0.0845	000
Set Plug 3A	**371108520**	**371108540**	$110.00	**371108560**	$237.25	3/8"	3/8"	0.0874	0.0858	000
4-40 UNC										
Taperlock Plug 2B	**301110010**	**301110020**	$53.00	**301110040**	$122.00	5/16"	7/32"	0.0958	0.0991	00
Taperlock Plug 3B	**301110010**	**301110030**	$53.00	**301110050**	$122.00	5/16"	7/32"	0.0958	0.0982	00
Reversible Plug 2B	**311110010**	**311110020**	$76.00	**311110040**	$170.75	5/8"	5/8"	0.0958	0.0991	2W
Reversible Plug 3B	**311110010**	**311110030**	$76.00	**311110050**	$170.75	5/8"	5/8"	0.0958	0.0982	2W
STI Plug 2B	**321110010**	**321110020**	$63.00	**321110040**	$142.00	5/16"	7/32"	0.1283	0.1308	00
STI Plug 3B	**321110010**	**321110030**	$63.00	**321110050**	$142.00	5/16"	7/32"	0.1283	0.1299	00
Ring 2A	**361110010**	**361110030**	$131.00	**361110050**	$262.00	5/32"	5/32"	0.0950	0.0925	1T
Ring 3A	**361110020**	**361110040**	$131.00	**361110060**	$262.00	5/32"	5/32"	0.0958	0.0939	1T
Set Plug 2A	**371110010**	**371110030**	$109.00	**371110050**	$234.00	3/8"	3/8"	0.0950	0.0925	00
Set Plug 3A	**371110020**	**371110040**	$109.00	**371110060**	$234.00	3/8"	3/8"	0.0958	0.0939	00
4-48 UNF										
Taperlock Plug 2B	**301111010**	**301111020**	$53.00	**301111040**	$122.00	5/16"	7/32"	0.0985	0.1016	00
Taperlock Plug 3B	**301111010**	**301111030**	$53.00	**301111050**	$122.00	5/16"	7/32"	0.0985	0.1008	00
Reversible Plug 2B	**311111010**	**311111020**	$76.00	**311111040**	$170.75	5/8"	5/8"	0.0985	0.1016	2W
Reversible Plug 3B	**311111010**	**311111030**	$76.00	**311111050**	$170.75	5/8"	5/8"	0.0985	0.1008	2W
STI Plug 2B	**321111010**	**321111020**	$63.00	**321111040**	$142.00	5/16"	7/32"	0.1256	0.1279	00
STI Plug 3B	**321111010**	**321111030**	$63.00	**321111050**	$142.00	5/16"	7/32"	0.1256	0.1271	00
Ring 2A	**361111010**	**361111030**	$131.00	**361111050**	$262.00	5/32"	5/32"	0.0978	0.0954	1T
Ring 3A	**361111020**	**361111040**	$131.00	**361111060**	$262.00	5/32"	5/32"	0.0985	0.0967	1T
Set Plug 2A	**371111010**	**371111030**	$109.00	**371111050**	$234.00	3/8"	3/8"	0.0978	0.0954	00
Set Plug 3A	**371111020**	**371111040**	$109.00	**371111060**	$234.00	3/8"	3/8"	0.0985	0.0967	00
5-40 UNC										
Taperlock Plug 2B	**301112510**	**301112520**	$44.00	**301112540**	$104.00	5/16"	7/32"	0.1088	0.1121	00
Taperlock Plug 3B	**301112510**	**301112530**	$44.00	**301112550**	$104.00	5/16"	7/32"	0.1088	0.1113	00
Reversible Plug 2B	**311112510**	**311112520**	$63.00	**311112540**	$144.75	5/8"	5/8"	0.1088	0.1121	2W
Reversible Plug 3B	**311112510**	**311112530**	$63.00	**311112550**	$144.75	5/8"	5/8"	0.1088	0.1113	2W
STI Plug 2B	**321112510**	**321112520**	$63.00	**321112540**	$142.00	13/32"	9/32"	0.1413	0.1438	0
STI Plug 3B	**321112510**	**321112530**	$63.00	**321112550**	$142.00	13/32"	9/32"	0.1413	0.1430	0
Ring 2A	**361112510**	**361112530**	$119.00	**361112550**	$238.00	5/32"	5/32"	0.1080	0.1054	1T
Ring 3A	**361112520**	**361112540**	$119.00	**361112560**	$238.00	5/32"	5/32"	0.1088	0.1069	1T
Set Plug 2A	**371112510**	**371112530**	$99.00	**371112550**	$214.00	3/8"	3/8"	0.1080	0.1054	00
Set Plug 3A	**371112520**	**371112540**	$99.00	**371112560**	$214.00	3/8"	3/8"	0.1088	0.1069	00
5-44 UNF										
Taperlock Plug 2B	**301113510**	**301113520**	$44.00	**301113540**	$104.00	5/16"	7/32"	0.1102	0.1134	00
Taperlock Plug 3B	**301113510**	**301113530**	$44.00	**301113550**	$104.00	5/16"	7/32"	0.1102	0.1126	00
Reversible Plug 2B	**311113510**	**311113520**	$64.00	**311113540**	$146.75	5/8"	5/8"	0.1102	0.1134	2W
Reversible Plug 3B	**311113510**	**311113530**	$64.00	**311113550**	$146.75	5/8"	5/8"	0.1102	0.1126	2W
Ring 2A	**361113510**	**361113530**	$119.00	**361113550**	$238.00	5/32"	5/32"	0.1095	0.1070	1T
Ring 3A	**361113520**	**361113540**	$119.00	**361113560**	$238.00	5/32"	5/32"	0.1102	0.1083	1T
Set Plug 2A	**371113510**	**371113530**	$101.00	**371113550**	$218.00	3/8"	3/8"	0.1095	0.1070	00
Set Plug 3A	**371113520**	**371113540**	$101.00	**371113560**	$218.00	3/8"	3/8"	0.1102	0.1083	00

Standard Thread Gages

INCH	Part No. Go Member	Part No NoGo Member	Price	Part No. Go/NoGo Set	Price	Gage length Go (Min)	Gage length NoGo (Min)	Pitch Diameters Go	Pitch Diameters NoGo	Handle No.
6-32 UNC										
Taperlock Plug 2B	**301115010**	**301115020**	$44.00	**301115040**	$104.00	5/16"	7/32"	0.1177	0.1214	00
Taperlock Plug 3B	**301115010**	**301115030**	$44.00	**301115050**	$104.00	5/16"	7/32"	0.1177	0.1204	00
Reversible Plug 2B	**311115010**	**311115020**	$64.00	**311115040**	$146.75	3/4"	3/4"	0.1177	0.1214	2W
Reversible Plug 3B	**311115010**	**311115030**	$64.00	**311115050**	$146.75	3/4"	3/4"	0.1177	0.1204	2W
STI Plug 2B	**321115010**	**321115020**	$64.00	**321115040**	$144.00	13/32"	9/32"	0.1583	0.1611	0
STI Plug 3B	**321115010**	**321115030**	$64.00	**321115050**	$144.00	13/32"	9/32"	0.1583	0.1601	0
Ring 2A	**361115010**	**361115030**	$119.00	**361115050**	$238.00	5/32"	5/32"	0.1169	0.1141	1T
Ring 3A	**361115020**	**361115040**	$119.00	**361115060**	$238.00	5/32"	5/32"	0.1177	0.1156	1T
Set Plug 2A	**371115010**	**371115030**	$101.00	**371115050**	$218.00	3/8"	3/8"	0.1169	0.1141	00
Set Plug 3A	**371115020**	**371115040**	$101.00	**371115060**	$218.00	3/8"	3/8"	0.1177	0.1156	00
6-40 UNF										
Taperlock Plug 2B	**301116010**	**301116020**	$44.00	**301116040**	$104.00	5/16"	7/32"	0.1218	0.1252	00
Taperlock Plug 3B	**301116010**	**301116030**	$44.00	**301116050**	$104.00	5/16"	7/32"	0.1218	0.1243	00
Reversible Plug 2B	**311116010**	**311116020**	$64.00	**311116040**	$146.75	3/4"	3/4"	0.1218	0.1252	2W
Reversible Plug 3B	**311116010**	**311116030**	$64.00	**311116050**	$146.75	3/4"	3/4"	0.1218	0.1243	2W
STI Plug 2B	**321116010**	**321116020**	$64.00	**321116040**	$144.00	13/32"	9/32"	0.1543	0.1569	0
STI Plug 3B	**321116010**	**321116030**	$64.00	**321116050**	$144.00	13/32"	9/32"	0.1543	0.1560	0
Ring 2A	**361116010**	**361116030**	$119.00	**361116050**	$238.00	5/32"	5/32"	0.1210	0.1184	1T
Ring 3A	**361116020**	**361116040**	$119.00	**361116060**	$238.00	5/32"	5/32"	0.1218	0.1198	1T
Set Plug 2A	**371116010**	**371116030**	$101.00	**371116050**	$218.00	3/8"	3/8"	0.1210	0.1184	00
Set Plug 3A	**371116020**	**371116040**	$101.00	**371116060**	$218.00	3/8"	3/8"	0.1218	0.1198	00
8-32 UNC										
Taperlock Plug 2B	**301117510**	**301117520**	$44.00	**301117540**	$104.00	13/32"	9/32"	0.1437	0.1475	0
Taperlock Plug 3B	**301117510**	**301117530**	$44.00	**301117550**	$104.00	13/32"	9/32"	0.1437	0.1465	0
Reversible Plug 2B	**311117510**	**311117520**	$64.00	**311117540**	$146.75	3/4"	3/4"	0.1437	0.1475	2W
Reversible Plug 3B	**311117510**	**311117530**	$64.00	**311117550**	$146.75	3/4"	3/4"	0.1437	0.1465	2W
STI Plug 2B	**321117510**	**321117520**	$63.00	**321117540**	$142.00	13/32"	9/32"	0.1843	0.1872	0
STI Plug 3B	**321117510**	**321117530**	$63.00	**321117550**	$142.00	13/32"	9/32"	0.1843	0.1862	0
Ring 2A	**361117510**	**361117530**	$119.00	**361117550**	$238.00	3/16"	3/16"	0.1428	0.1399	1T
Ring 3A	**361117520**	**361117540**	$119.00	**361117560**	$238.00	3/16"	3/16"	0.1437	0.1415	1T
Set Plug 2A	**371117510**	**371117530**	$101.00	**371117550**	$218.00	13/32"	13/32"	0.1428	0.1399	0
Set Plug 3A	**371117520**	**371117540**	$101.00	**371117560**	$218.00	13/32"	13/32"	0.1437	0.1415	0
8-36 UNF										
Taperlock Plug 2B	**301118510**	**301118520**	$44.00	**301118540**	$104.00	13/32"	9/32"	0.1460	0.1496	0
Taperlock Plug 3B	**301118510**	**301118530**	$44.00	**301118550**	$104.00	13/32"	9/32"	0.1460	0.1487	0
Reversible Plug 2B	**311118510**	**311118520**	$64.00	**311118540**	$146.75	3/4"	3/4"	0.1460	0.1496	2W
Reversible Plug 3B	**311118510**	**311118530**	$64.00	**311118550**	$146.75	3/4"	3/4"	0.1460	0.1487	2W
STI Plug 2B	**321118510**	**321118520**	$63.00	**321118540**	$142.00	13/32"	9/32"	0.1821	0.1849	0
STI Plug 3B	**321118510**	**321118530**	$63.00	**321118550**	$142.00	13/32"	9/32"	0.1821	0.1840	0
Ring 2A	**361118510**	**361118530**	$119.00	**361118550**	$238.00	3/16"	3/16"	0.1452	0.1424	1T
Ring 3A	**361118520**	**361118540**	$119.00	**361118560**	$238.00	3/16"	3/16"	0.1460	0.1439	1T
Set Plug 2A	**371118510**	**371118530**	$101.00	**371118550**	$218.00	13/32"	13/32"	0.1452	0.1424	0
Set Plug 3A	**371118520**	**371118540**	$101.00	**371118560**	$218.00	13/32"	13/32"	0.1460	0.1439	0
10-24 UNC										
Taperlock Plug 2B	**301120010**	**301120020**	$44.00	**301120040**	$104.00	13/32"	9/32"	0.1629	0.1672	0
Taperlock Plug 3B	**301120010**	**301120030**	$44.00	**301120050**	$104.00	13/32"	9/32"	0.1629	0.1661	0
Reversible Plug 2B	**311120010**	**311120020**	$64.00	**311120040**	$148.75	7/8"	7/8"	0.1629	0.1672	3W
Reversible Plug 3B	**311120010**	**311120030**	$64.00	**311120050**	$148.75	7/8"	7/8"	0.1629	0.1661	3W
STI Plug 2B	**321120010**	**321120020**	$63.00	**321120040**	$142.00	13/32"	9/32"	0.2170	0.2203	0
STI Plug 3B	**321120010**	**321120030**	$63.00	**321120050**	$142.00	13/32"	9/32"	0.2170	0.2192	0
Ring 2A	**361120010**	**361120030**	$119.00	**361120050**	$238.00	3/16"	3/16"	0.1619	0.1586	1T
Ring 3A	**361120020**	**361120040**	$119.00	**361120060**	$238.00	3/16"	3/16"	0.1629	0.1604	1T
Set Plug 2A	**371120010**	**371120030**	$101.00	**371120050**	$218.00	13/32"	13/32"	0.1619	0.1586	0
Set Plug 3A	**371120020**	**371120040**	$101.00	**371120060**	$218.00	13/32"	13/32"	0.1629	0.1604	0

Standard Thread Gages

INCH	Part No. Go Member	Part No. NoGo Member	Price	Part No. Go/NoGo Set	Price	Gage length Go (Min)	Gage length NoGo (Min)	Pitch Diameters Go	Pitch Diameters NoGo	Handle No.
10-32 UNF										
Taperlock Plug 2B	**301121010**	**301121020**	$44.00	**301121040**	$104.00	13/32"	9/32"	0.1697	0.1736	0
Taperlock Plug 3B	**301121010**	**301121030**	$44.00	**301121050**	$104.00	13/32"	9/32"	0.1697	0.1726	0
Reversible Plug 2B	**311121010**	**311121020**	$64.00	**311121040**	$148.75	7/8"	7/8"	0.1697	0.1736	3W
Reversible Plug 3B	**311121010**	**311121030**	$64.00	**311121050**	$148.75	7/8"	7/8"	0.1697	0.1726	3W
STI Plug 2B	**321121010**	**321121020**	$63.00	**321121040**	$142.00	13/32"	9/32"	0.2103	0.2133	0
STI Plug 3B	**321121010**	**321121030**	$63.00	**321121050**	$142.00	13/32"	9/32"	0.2103	0.2123	0
Ring 2A	**361121010**	**361121030**	$119.00	**361121050**	$254.00	3/16"	3/16"	0.1688	0.1658	1T
Ring 3A	**361121020**	**361121040**	$119.00	**361121060**	$254.00	3/16"	3/16"	0.1697	0.1674	1T
Set Plug 2A	**371121010**	**371121030**	$101.00	**371121050**	$218.00	13/32"	13/32"	0.1688	0.1658	0
Set Plug 3A	**371121020**	**371121040**	$101.00	**371121060**	$218.00	13/32"	13/32"	0.1697	0.1674	0
12-24 UNC										
Taperlock Plug 2B	**301122510**	**301122520**	$44.00	**301122540**	$104.00	13/32"	9/32"	0.1889	0.1933	0
Taperlock Plug 3B	**301122510**	**301122530**	$44.00	**301122550**	$104.00	13/32"	9/32"	0.1889	0.1922	0
Reversible Plug 2B	**311122510**	**311122520**	$64.00	**311122540**	$148.75	7/8"	7/8"	0.1889	0.1933	3W
Reversible Plug 3B	**311122510**	**311122530**	$64.00	**311122550**	$148.75	7/8"	7/8"	0.1889	0.1922	3W
STI Plug 2B	**321122510**	**321122520**	$63.00	**321122540**	$142.00	1/2"	5/16"	0.2430	0.2464	1
STI Plug 3B	**321122510**	**321122530**	$63.00	**321122550**	$142.00	1/2"	5/16"	0.2430	0.2453	1
Ring 2A	**361122510**	**361122530**	$119.00	**361122550**	$238.00	3/16"	3/16"	0.1879	0.1845	1T
Ring 3A	**361122520**	**361122540**	$119.00	**361122560**	$238.00	3/16"	3/16"	0.1889	0.1863	1T
Set Plug 2A	**371122510**	**371122530**	$105.00	**371122550**	$226.00	13/32"	13/32"	0.1879	0.1845	0
Set Plug 3A	**371122520**	**371122540**	$105.00	**371122560**	$226.00	13/32"	13/32"	0.1889	0.1863	0
12-28 UNF										
Taperlock Plug 2B	**301123510**	**301123520**	$44.00	**301123540**	$104.00	13/32"	9/32"	0.1928	0.1970	0
Taperlock Plug 3B	**301123510**	**301123530**	$44.00	**301123550**	$104.00	13/32"	9/32"	0.1928	0.1959	0
Reversible Plug 2B	**311123510**	**311123520**	$64.00	**311123540**	$148.75	7/8"	7/8"	0.1928	0.1970	3W
Reversible Plug 3B	**311123510**	**311123530**	$64.00	**311123550**	$148.75	7/8"	7/8"	0.1928	0.1959	3W
Ring 2A	**361123510**	**361123530**	$119.00	**361123550**	$238.00	3/16"	3/16"	0.1918	0.1886	1T
Ring 3A	**361123520**	**361123540**	$119.00	**361123560**	$238.00	3/16"	3/16"	0.1928	0.1904	1T
Set Plug 2A	**371123510**	**371123530**	$105.00	**371123550**	$226.00	13/32"	13/32"	0.1918	0.1886	0
Set Plug 3A	**371123520**	**371123540**	$105.00	**371123560**	$226.00	13/32"	13/32"	0.1928	0.1904	0
12-32 UNEF										
Taperlock Plug 2B	**301124510**	**301124520**	$58.00	**301124540**	$132.00	13/32"	9/32"	0.1957	0.1998	0
Taperlock Plug 3B	**301124510**	**301124530**	$58.00	**301124550**	$132.00	13/32"	9/32"	0.1957	0.1988	0
Reversible Plug 2B	**311124510**	**311124520**	$80.00	**311124540**	$180.75	7/8"	7/8"	0.1957	0.1998	3W
Reversible Plug 3B	**311124510**	**311124530**	$80.00	**311124550**	$180.75	7/8"	7/8"	0.1957	0.1988	3W
Ring 2A	**361124510**	**361124530**	$154.00	**361124550**	$308.00	3/16"	3/16"	0.1948	0.1917	1T
Ring 3A	**361124520**	**361124540**	$154.00	**361124560**	$308.00	3/16"	3/16"	0.1957	0.1933	1T
Set Plug 2A	**371124510**	**371124530**	$127.00	**371124550**	$270.00	13/32"	13/32"	0.1948	0.1917	0
Set Plug 3A	**371124520**	**371124540**	$127.00	**371124560**	$270.00	13/32"	13/32"	0.1957	0.1933	0
1/4-20 UNC										
Taperlock Plug 2B	**301126010**	**301126020**	$42.00	**301126040**	$100.00	1/2"	5/16"	0.2175	0.2224	1
Taperlock Plug 3B	**301126010**	**301126030**	$42.00	**301126050**	$100.00	1/2"	5/16"	0.2175	0.2211	1
Reversible Plug 2B	**311126010**	**311126020**	$60.00	**311126040**	$140.75	7/8"	7/8"	0.2175	0.2224	3W
Reversible Plug 3B	**311126010**	**311126030**	$60.00	**311126050**	$140.75	7/8"	7/8"	0.2175	0.2211	3W
STI Plug 2B	**321126010**	**321126020**	$60.00	**321126040**	$136.00	1/2"	5/16"	0.2825	0.2864	1
STI Plug 3B	**321126010**	**321126030**	$60.00	**321126050**	$136.00	1/2"	5/16"	0.2825	0.2851	1
Ring 2A	**361126010**	**361126030**	$116.00	**361126050**	$232.00	11/32"	11/32"	0.2164	0.2127	2T
Ring 3A	**361126020**	**361126040**	$116.00	**361126060**	$232.00	11/32"	11/32"	0.2175	0.2147	2T
Set Plug 2A	**371126010**	**371126030**	$94.00	**371126050**	$204.00	3/4"	3/4"	0.2164	0.2127	1
Set Plug 3A	**371126020**	**371126040**	$94.00	**371126060**	$204.00	3/4"	3/4"	0.2175	0.2147	1

Standard Thread Gages

INCH	Part No. Go Member	Part No. NoGo Member	Price	Part No. Go/NoGo Set	Price	Gage length Go (Min)	Gage length NoGo (Min)	Pitch Diameters Go	Pitch Diameters NoGo	Handle No.
1/4-28 UNF										
Taperlock Plug 2B	**301127010**	**301127020**	$42.00	**301127040**	$100.00	1/2"	5/16"	0.2268	0.2311	1
Taperlock Plug 3B	**301127010**	**301127030**	$42.00	**301127050**	$100.00	1/2"	5/16"	0.2268	0.2300	1
Reversible Plug 2B	**311127010**	**311127020**	$60.00	**311127040**	$140.75	7/8"	7/8"	0.2268	0.2311	3W
Reversible Plug 3B	**311127010**	**311127030**	$60.00	**311127050**	$140.75	7/8"	7/8"	0.2268	0.2300	3W
STI Plug 2B	**321127010**	**321127020**	$60.00	**321127040**	$136.00	1/2"	5/16"	0.2732	0.2765	1
STI Plug 3B	**321127010**	**321127030**	$60.00	**321127050**	$136.00	1/2"	5/16"	0.2732	0.2754	1
Ring 2A	**361127010**	**361127030**	$116.00	**361127050**	$232.00	11/32"	11/32"	0.2258	0.2225	2T
Ring 3A	**361127020**	**361127040**	$116.00	**361127060**	$232.00	11/32"	11/32"	0.2268	0.2243	2T
Set Plug 2A	**371127010**	**371127030**	$94.00	**371127050**	$204.00	3/4"	3/4"	0.2258	0.2225	1
Set Plug 3A	**371127020**	**371127040**	$94.00	**371127060**	$204.00	3/4"	3/4"	0.2268	0.2243	1
1/4-32 UNEF										
Taperlock Plug 2B	**301128010**	**301128020**	$73.00	**301128040**	$162.00	1/2"	5/16"	0.2297	0.2339	1
Taperlock Plug 3B	**301128010**	**301128030**	$73.00	**301128050**	$162.00	1/2"	5/16"	0.2297	0.2328	1
Reversible Plug 2B	**311128010**	**311128020**	$95.00	**311128040**	$210.75	7/8"	7/8"	0.2297	0.2339	3W
Reversible Plug 3B	**311128010**	**311128030**	$95.00	**311128050**	$210.75	7/8"	7/8"	0.2297	0.2328	3W
Ring 2A	**361128010**	**361128030**	$158.00	**361128050**	$316.00	11/32"	11/32"	0.2287	0.2255	2T
Ring 3A	**361128020**	**361128040**	$158.00	**361128060**	$316.00	11/32"	11/32"	0.2297	0.2273	2T
Set Plug 2A	**371128010**	**371128030**	$130.00	**371128050**	$276.00	3/4"	3/4"	0.2287	0.2255	1
Set Plug 3A	**371128020**	**371128040**	$130.00	**371128060**	$276.00	3/4"	3/4"	0.2297	0.2273	1
5/16-18 UNC										
Taperlock Plug 2B	**301129510**	**301129520**	$42.00	**301129540**	$100.00	1/2"	5/16"	0.2764	0.2817	1
Taperlock Plug 3B	**301129510**	**301129530**	$42.00	**301129550**	$100.00	1/2"	5/16"	0.2764	0.2803	1
Reversible Plug 2B	**311129510**	**311129520**	$60.00	**311129540**	$141.50	1"	1"	0.2764	0.2817	4W
Reversible Plug 3B	**311129510**	**311129530**	$60.00	**311129550**	$141.50	1"	1"	0.2764	0.2803	4W
STI Plug 2B	**321129510**	**321129520**	$60.00	**321129540**	$136.00	3/4"	3/8"	0.3486	0.3529	2
STI Plug 3B	**321129510**	**321129530**	$60.00	**321129550**	$136.00	3/4"	3/8"	0.3486	0.3515	2
Ring 2A	**361129510**	**361129530**	$116.00	**361129550**	$232.00	11/32"	11/32"	0.2752	0.2712	2T
Ring 3A	**361129520**	**361129540**	$116.00	**361129560**	$232.00	11/32"	11/32"	0.2764	0.2734	2T
Set Plug 2A	**371129510**	**371129530**	$94.00	**371129550**	$204.00	3/4"	3/4"	0.2752	0.2712	1
Set Plug 3A	**371129520**	**371129540**	$94.00	**371129560**	$204.00	3/4"	3/4"	0.2764	0.2734	1
5/16-20 UN										
Taperlock Plug 2B	**301130010**	**301130020**	$114.00	**301130040**	$244.00	1/2"	5/16"	0.2800	0.2852	1
Taperlock Plug 3B	**301130010**	**301130030**	$114.00	**301130050**	$244.00	1/2"	5/16"	0.2800	0.2839	1
Ring 2A	**361130010**	**361130030**	$282.00	**361130050**	$564.00	1"	1"	0.2788	0.2748	2T
Ring 3A	**361130020**	**361130040**	$282.00	**361130060**	$564.00	1"	1"	0.2800	0.2770	2T
Set Plug 2A	**371130010**	**371130030**	$161.00	**371130050**	$338.00	3/4"	3/4"	0.2788	0.2748	1
Set Plug 3A	**371130020**	**371130040**	$161.00	**371130060**	$338.00	3/4"	3/4"	0.2800	0.2770	1
5/16-24 UNF										
Taperlock Plug 2B	**301130510**	**301130520**	$42.00	**301130540**	$100.00	1/2"	5/16"	0.2854	0.2902	1
Taperlock Plug 3B	**301130510**	**301130530**	$42.00	**301130550**	$100.00	1/2"	5/16"	0.2854	0.2890	1
Reversible Plug 2B	**311130510**	**311130520**	$60.00	**311130540**	$141.50	1"	1"	0.2854	0.2902	4W
Reversible Plug 3B	**311130510**	**311130530**	$60.00	**311130550**	$141.50	1"	1"	0.2854	0.2890	4W
STI Plug 2B	**321130510**	**321130520**	$60.00	**321130540**	$136.00	1/2"	5/16"	0.3395	0.3433	1
STI Plug 3B	**321130510**	**321130530**	$60.00	**321130550**	$136.00	1/2"	5/16"	0.3395	0.3421	1
Ring 2A	**361130510**	**361130530**	$116.00	**361130550**	$232.00	11/32"	11/32"	0.2843	0.2806	2T
Ring 3A	**361130520**	**361130540**	$116.00	**361130560**	$232.00	11/32"	11/32"	0.2854	0.2827	2T
Set Plug 2A	**371130510**	**371130530**	$94.00	**371130550**	$204.00	3/4"	3/4"	0.2843	0.2806	1
Set Plug 3A	**371130520**	**371130540**	$94.00	**371130560**	$204.00	3/4"	3/4"	0.2854	0.2827	1
5/16-28 UN										
Taperlock Plug 2B	**301131010**	**301131020**	$127.00	**301131040**	$270.00	1/2"	5/16"	0.2893	0.2937	1
Taperlock Plug 3B	**301131010**	**301131030**	$127.00	**301131050**	$270.00	1/2"	5/16"	0.2893	0.2926	1
Ring 2A	**361131010**	**361131030**	$297.00	**361131050**	$594.00	11/32"	11/32"	0.2883	0.2849	2T
Ring 3A	**361131020**	**361131040**	$297.00	**361131060**	$594.00	11/32"	11/32"	0.2893	0.2867	2T
Set Plug 2A	**371131010**	**371131030**	$181.00	**371131050**	$378.00	3/4"	3/4"	0.2883	0.2849	1
Set Plug 3A	**371131020**	**371131040**	$181.00	**371131060**	$378.00	3/4"	3/4"	0.2893	0.2867	1

Standard Thread Gages

INCH	Part No. Go Member	Part No. NoGo Member	Price	Part No. Go/NoGo Set	Price	Gage length Go (Min)	Gage length NoGo (Min)	Pitch Diameters Go	Pitch Diameters NoGo	Handle No.
5/16-32 UNEF										
Taperlock Plug 2B	**301131510**	**301131520**	$73.00	**301131540**	$162.00	1/2"	5/16"	0.2922	0.2964	1
Taperlock Plug 3B	**301131510**	**301131530**	$73.00	**301131550**	$162.00	1/2"	5/16"	0.2922	0.2953	1
Reversible Plug 2B	**311131510**	**311131520**	$95.00	**311131540**	$210.00	1"	1"	0.2922	0.2964	4W
Reversible Plug 3B	**311131510**	**311131530**	$95.00	**311131550**	$210.00	1"	1"	0.2922	0.2953	4W
Ring 2A	**361131510**	**361131530**	$159.00	**361131550**	$318.00	11/32"	11/32"	0.2912	0.2880	2T
Ring 3A	**361131520**	**361131540**	$159.00	**361131560**	$318.00	11/32"	11/32"	0.2922	0.2898	2T
Set Plug 2A	**371131510**	**371131530**	$129.00	**371131550**	$274.00	3/4"	3/4"	0.2912	0.2880	1
Set Plug 3A	**371131520**	**371131540**	$129.00	**371131560**	$274.00	3/4"	3/4"	0.2922	0.2898	1
3/8-16 UNC										
Taperlock Plug 2B	**301133010**	**301133020**	$43.00	**301133040**	$102.00	3/4"	3/8"	0.3344	0.3401	2
Taperlock Plug 3B	**301133010**	**301133030**	$43.00	**301133050**	$102.00	3/4"	3/8"	0.3344	0.3387	2
Reversible Plug 2B	**311133010**	**311133020**	$62.00	**311133040**	$145.50	1-1/4"	1-1/4"	0.3344	0.3401	4W
Reversible Plug 3B	**311133010**	**311133030**	$62.00	**311133050**	$145.50	1-1/4"	1-1/4"	0.3344	0.3387	4W
STI Plug 2B	**321133010**	**321133020**	$62.00	**321133040**	$140.00	3/4"	3/8"	0.4156	0.4203	2
STI Plug 3B	**321133010**	**321133030**	$62.00	**321133050**	$140.00	3/4"	3/8"	0.4156	0.4189	2
Ring 2A	**361133010**	**361133030**	$125.00	**361133050**	$250.00	7/16"	7/16"	0.3331	0.3287	3T
Ring 3A	**361133020**	**361133040**	$125.00	**361133060**	$250.00	7/16"	7/16"	0.3344	0.3311	3T
Set Plug 2A	**371133010**	**371133030**	$97.00	**371133050**	$210.00	1"	1"	0.3331	0.3287	2
Set Plug 3A	**371133020**	**371133040**	$97.00	**371133060**	$210.00	1"	1"	0.3344	0.3311	2
3/8-20 UN										
Taperlock Plug 2B	**301133510**	**301133520**	$114.00	**301133540**	$244.00	3/4"	3/8"	0.3425	0.3479	2
Taperlock Plug 3B	**301133510**	**301133530**	$114.00	**301133550**	$244.00	3/4"	3/8"	0.3425	0.3465	2
Ring 2A	**361133510**	**361133530**	$290.00	**361133550**	$575.00	7/16"	7/16"	0.3413	0.3372	3T
Ring 3A	**361133520**	**361133540**	$290.00	**361133560**	$575.00	7/16"	7/16"	0.3425	0.3394	3T
Set Plug 2A	**371133510**	**371133530**	$161.00	**371133550**	$338.00	1"	1"	0.3413	0.3372	2
Set Plug 3A	**371133520**	**371133540**	$161.00	**371133560**	$338.00	1"	1"	0.3425	0.3394	2
3/8-24 UNF										
Taperlock Plug 2B	**301134010**	**301134020**	$43.00	**301134040**	$102.00	3/4"	3/8"	0.3479	0.3528	2
Taperlock Plug 3B	**301134010**	**301134030**	$43.00	**301134050**	$102.00	3/4"	3/8"	0.3479	0.3516	2
Reversible Plug 2B	**311134010**	**311134020**	$62.00	**311134040**	$145.50	1-1/8"	1-1/8"	0.3479	0.3528	4W
Reversible Plug 3B	**311134010**	**311134030**	$62.00	**311134050**	$145.50	1-1/8"	1-1/8"	0.3479	0.3516	4W
STI Plug 2B	**321134010**	**321134020**	$62.00	**321134040**	$140.00	3/4"	3/8"	0.4020	0.4059	2
STI Plug 3B	**321134010**	**321134030**	$62.00	**321134050**	$140.00	3/4"	3/8"	0.4020	0.4047	2
Ring 2A	**361134010**	**361134030**	$125.00	**361134050**	$250.00	7/16"	7/16"	0.3468	0.3430	3T
Ring 3A	**361134020**	**361134040**	$125.00	**361134060**	$250.00	7/16"	7/16"	0.3479	0.3450	3T
Set Plug 2A	**371134010**	**371134030**	$97.00	**371134050**	$210.00	1"	1"	0.3468	0.3430	2
Set Plug 3A	**371134020**	**371134040**	$97.00	**371134060**	$210.00	1"	1"	0.3479	0.3450	2
3/8-28 UN										
Taperlock Plug 2B	**301134510**	**301134520**	$127.00	**301134540**	$270.00	3/4"	3/8"	0.3518	0.3564	2
Taperlock Plug 3B	**301134510**	**301134530**	$127.00	**301134550**	$270.00	3/4"	3/8"	0.3518	0.3553	2
Ring 2A	**361134510**	**361134530**	$325.00	**361134550**	$645.00	7/16"	7/16"	0.3507	0.3471	3T
Ring 3A	**361134520**	**361134540**	$325.00	**361134560**	$645.00	7/16"	7/16"	0.3518	0.3491	3T
Set Plug 2A	**371134510**	**371134530**	$181.00	**371134550**	$378.00	1"	1"	0.3507	0.3471	2
Set Plug 3A	**371134520**	**371134540**	$181.00	**371134560**	$378.00	1"	1"	0.3518	0.3491	2
3/8-32 UNEF										
Taperlock Plug 2B	**301135010**	**301135020**	$82.00	**301135040**	$180.00	3/4"	3/8"	0.3547	0.3591	2
Taperlock Plug 3B	**301135010**	**301135030**	$82.00	**301135050**	$180.00	3/4"	3/8"	0.3547	0.3580	2
Reversible Plug 2B	**311135010**	**311135020**	$99.00	**311135040**	$220.00	1-1/8"	1-1/8"	0.3547	0.3591	4W
Reversible Plug 3B	**311135010**	**311135030**	$99.00	**311135050**	$220.00	1-1/8"	1-1/8"	0.3547	0.3580	4W
Ring 2A	**361135010**	**361135030**	$161.00	**361135050**	$322.00	7/16"	7/16"	0.3537	0.3503	3T
Ring 3A	**361135020**	**361135040**	$161.00	**361135060**	$322.00	7/16"	7/16"	0.3547	0.3522	3T
Set Plug 2A	**371135010**	**371135030**	$147.00	**371135050**	$310.00	1"	1"	0.3537	0.3503	2
Set Plug 3A	**371135020**	**371135040**	$147.00	**371135060**	$310.00	1"	1"	0.3547	0.3522	2

Standard Thread Gages

INCH	Part No. Go Member	Part No. NoGo Member	Price	Part No. Go/NoGo Set	Price	Gage length Go (Min)	Gage length NoGo (Min)	Pitch Diameters Go	Pitch Diameters NoGo	Handle No.
7/16-14 UNC										
Taperlock Plug 2B	**301136510**	**301136520**	$43.00	**301136540**	$102.00	3/4"	3/8"	0.3911	0.3972	2
Taperlock Plug 3B	**301136510**	**301136530**	$43.00	**301136550**	$102.00	3/4"	3/8"	0.3911	0.3957	2
Reversible Plug 2B	**311136510**	**311136520**	$66.00	**311136540**	$157.00	1-1/4"	1-1/4"	0.3911	0.3972	5W
Reversible Plug 3B	**311136510**	**311136530**	$66.00	**311136550**	$157.00	1-1/4"	1-1/4"	0.3911	0.3957	5W
STI Plug 2B	**321136510**	**321136520**	$66.00	**321136540**	$148.00	7/8"	1/2"	0.4839	0.4890	3
STI Plug 3B	**321136510**	**321136530**	$66.00	**321136550**	$148.00	7/8"	1/2"	0.4839	0.4875	3
Ring 2A	**361136510**	**361136530**	$125.00	**361136550**	$250.00	7/16"	7/16"	0.3897	0.3850	3T
Ring 3A	**361136520**	**361136540**	$125.00	**361136560**	$250.00	7/16"	7/16"	0.3911	0.3876	3T
Set Plug 2A	**371136510**	**371136530**	$98.00	**371136550**	$212.00	1"	1"	0.3897	0.3850	2
Set Plug 3A	**371136520**	**371136540**	$98.00	**371136560**	$212.00	1"	1"	0.3911	0.3876	2
7/16 - 16 UN										
Taperlock Plug 2B	**301137010**	**301137020**	$114.00	**301137040**	$244.00	3/4"	3/8"	0.3969	0.4028	2
Taperlock Plug 3B	**301137010**	**301137030**	$114.00	**301137050**	$244.00	3/4"	3/8"	0.3969	0.4014	2
Ring 2A	**361137010**	**361137030**	$293.00	**361137050**	$575.00	7/16"	7/16"	0.3955	0.3909	3T
Ring 3A	**361137020**	**361137040**	$293.00	**361137060**	$575.00	7/16"	7/16"	0.3969	0.3935	3T
Set Plug 2A	**371137010**	**371137030**	$161.00	**371137050**	$338.00	1"	1"	0.3955	0.3909	2
Set Plug 3A	**371137020**	**371137040**	$161.00	**371137060**	$338.00	1"	1"	0.3969	0.3935	2
7/16-20 UNF										
Taperlock Plug 2B	**301137510**	**301137520**	$43.00	**301137540**	$102.00	3/4"	3/8"	0.4050	0.4104	2
Taperlock Plug 3B	**301137510**	**301137530**	$43.00	**301137550**	$102.00	3/4"	3/8"	0.4050	0.4091	2
Reversible Plug 2B	**311137510**	**311137520**	$66.00	**311137540**	$157.00	1-1/4"	1-1/4"	0.4050	0.4104	5W
Reversible Plug 3B	**311137510**	**311137530**	$66.00	**311137550**	$157.00	1-1/4"	1-1/4"	0.4050	0.4091	5W
STI Plug 2B	**321137510**	**321137520**	$66.00	**321137540**	$148.00	3/4"	3/8"	0.4700	0.4744	3
STI Plug 3B	**321137510**	**321137530**	$66.00	**321137550**	$148.00	3/4"	3/8"	0.4700	0.4731	3
Ring 2A	**361137510**	**361137530**	$125.00	**361137550**	$250.00	7/16"	7/16"	0.4037	0.3995	3T
Ring 3A	**361137520**	**361137540**	$125.00	**361137560**	$250.00	7/16"	7/16"	0.4050	0.4019	3T
Set Plug 2A	**371137510**	**371137530**	$98.00	**371137550**	$212.00	1"	1"	0.4037	0.3995	2
Set Plug 3A	**371137520**	**371137540**	$98.00	**371137560**	$212.00	1"	1"	0.4050	0.4019	2
7/16-24 UNS										
Taperlock Plug 2B	**301138010**	**301138120**	$119.00	**301138140**	$254.00	3/4"	3/8"	0.4104	0.4154	2
Taperlock Plug 3B	**301138010**	**301138130**	$119.00	**301138150**	$254.00	3/4"	3/8"	0.4104	0.4142	2
Ring 2A	**361138020**	**361138040**	$311.00	**361138060**	$622.00	7/16"	7/16"	0.4092	0.4053	3T
Ring 3A	**361138110**	**361138130**	$311.00	**361138150**	$622.00	7/16"	7/16"	0.4104	0.4075	3T
Set Plug 2A	**371138020**	**371138040**	$171.00	**371138060**	$358.00	1"	1"	0.4092	0.4053	2
Set Plug 3A	**371138110**	**371138130**	$171.00	**371138150**	$358.00	1"	1"	0.4104	0.4075	2
7/16-28 UNEF										
Taperlock Plug 2B	**301138510**	**301138520**	$82.00	**301138540**	$180.00	3/4"	3/8"	0.4143	0.4189	2
Taperlock Plug 3B	**301138510**	**301138530**	$82.00	**301138550**	$180.00	3/4"	3/8"	0.4143	0.4178	2
Reversible Plug 2B	**311138510**	**311138520**	$99.00	**311138540**	$223.00	1-1/4"	1-1/4"	0.4143	0.4189	5W
Reversible Plug 3B	**311138510**	**311138530**	$99.00	**311138550**	$223.00	1-1/4"	1-1/4"	0.4143	0.4178	5W
Ring 2A	**361138510**	**361138530**	$161.00	**361138550**	$322.00	7/16"	7/16"	0.4132	0.4096	3T
Ring 3A	**361138520**	**361138540**	$161.00	**361138560**	$322.00	7/16"	7/16"	0.4143	0.4116	3T
Set Plug 2A	**371138510**	**371138530**	$147.00	**371138550**	$310.00	1"	1"	0.4132	0.4096	2
Set Plug 3A	**371138520**	**371138540**	$147.00	**371138560**	$310.00	1"	1"	0.4143	0.4116	2
7/16-32 UN										
Taperlock Plug 2B	**301139010**	**301139020**	$131.00	**301139040**	$278.00	3/4"	3/8"	0.4172	0.4216	2
Taperlock Plug 3B	**301139010**	**301139030**	$131.00	**301139050**	$278.00	3/4"	3/8"	0.4172	0.4205	2
Ring 2A	**361139010**	**361139030**	$335.00	**361139050**	$670.00	7/16"	7/16"	0.4162	0.4128	3T
Ring 3A	**361139020**	**361139040**	$335.00	**361139060**	$670.00	7/16"	7/16"	0.4172	0.4147	3T
Set Plug 2A	**371139010**	**371139030**	$186.00	**371139050**	$388.00	1"	1"	0.4162	0.4128	2
Set Plug 3A	**371139020**	**371139040**	$186.00	**371139060**	$388.00	1"	1"	0.4172	0.4147	2

Standard Thread Gages

INCH	Part No. Go Member	Part No. NoGo Member	Price	Part No. Go/NoGo Set	Price	Gage length Go (Min)	Gage length NoGo (Min)	Pitch Diameters Go	Pitch Diameters NoGo	Handle No.
1/2-13 UNC										
Taperlock Plug 2B	**301140010**	**301140020**	$44.00	**301140040**	$104.00	3/4"	3/8"	0.4500	0.4565	2
Taperlock Plug 3B	**301140010**	**301140030**	$44.00	**301140050**	$104.00	3/4"	3/8"	0.4500	0.4548	2
Reversible Plug 2B	**311140010**	**311140020**	$68.00	**311140040**	$161.00	1-3/8"	1-3/8"	0.4500	0.4565	5W
Reversible Plug 3B	**311140010**	**311140030**	$68.00	**311140050**	$161.00	1-3/8"	1-3/8"	0.4500	0.4548	5W
STI Plug 2B	**321140010**	**321140020**	$69.00	**321140040**	$154.00	7/8"	1/2"	0.5499	0.5554	3
STI Plug 3B	**321140010**	**321140030**	$69.00	**321140050**	$154.00	7/8"	1/2"	0.5499	0.5537	3
Ring 2A	**361140010**	**361140030**	$137.00	**361140050**	$274.00	7/16"	7/16"	0.4485	0.4435	3T
Ring 3A	**361140020**	**361140040**	$137.00	**361140060**	$274.00	7/16"	7/16"	0.4500	0.4463	3T
Set Plug 2A	**371140010**	**371140030**	$103.00	**371140050**	$222.00	1"	1"	0.4485	0.4435	2
Set Plug 3A	**371140020**	**371140040**	$103.00	**371140060**	$222.00	1"	1"	0.4500	0.4463	2
1/2-16 UN										
Taperlock Plug 2B	**301140510**	**301140520**	$114.00	**301140540**	$244.00	3/4"	3/8"	0.4594	0.4655	2
Taperlock Plug 3B	**301140510**	**301140530**	$114.00	**301140550**	$244.00	3/4"	3/8"	0.4594	0.4640	2
Ring 2A	**361140510**	**361140530**	$295.00	**361140550**	$590.00	7/16"	7/16"	0.4580	0.4533	3T
Ring 3A	**361140520**	**361140540**	$295.00	**361140560**	$590.00	7/16"	7/16"	0.4594	0.4559	3T
Set Plug 2A	**371140510**	**371140530**	$161.00	**371140550**	$338.00	1"	1"	0.4580	0.4533	2
Set Plug 3A	**371140520**	**371140540**	$161.00	**371140560**	$338.00	1"	1"	0.4594	0.4559	2
1/2-20 UNF										
Taperlock Plug 2B	**301141010**	**301141020**	$44.00	**301141040**	$104.00	3/4"	3/8"	0.4675	0.4731	2
Taperlock Plug 3B	**301141010**	**301141030**	$44.00	**301141050**	$104.00	3/4"	3/8"	0.4675	0.4717	2
Reversible Plug 2B	**311141010**	**311141020**	$68.00	**311141040**	$161.00	1-3/8"	1-3/8"	0.4675	0.4731	5W
Reversible Plug 3B	**311141010**	**311141030**	$68.00	**311141050**	$161.00	1-3/8"	1-3/8"	0.4675	0.4717	5W
STI Plug 2B	**321141010**	**321141020**	$69.00	**321141040**	$154.00	7/8"	1/2"	0.5325	0.5371	3
STI Plug 3B	**321141010**	**321141030**	$69.00	**321141050**	$154.00	7/8"	1/2"	0.5325	0.5357	3
Ring 2A	**361141010**	**361141030**	$137.00	**361141050**	$274.00	7/16"	7/16"	0.4662	0.4619	3T
Ring 3A	**361141020**	**361141040**	$137.00	**361141060**	$274.00	7/16"	7/16"	0.4675	0.4643	3T
Set Plug 2A	**371141010**	**371141030**	$103.00	**371141050**	$222.00	1"	1"	0.4662	0.4619	2
Set Plug 3A	**371141020**	**371141040**	$103.00	**371141060**	$222.00	1"	1"	0.4675	0.4643	2
1/2-28 UNEF										
Taperlock Plug 2B	**301142010**	**301142020**	$87.00	**301142040**	$190.00	3/4"	3/8"	0.4768	0.4816	2
Taperlock Plug 3B	**301142010**	**301142030**	$87.00	**301142050**	$190.00	3/4"	3/8"	0.4768	0.4804	2
Reversible Plug 2B	**311142010**	**311142020**	$99.00	**311142040**	$223.00	1-3/8"	1-3/8"	0.4768	0.4816	5W
Reversible Plug 3B	**311142010**	**311142030**	$99.00	**311142050**	$223.00	1-3/8"	1-3/8"	0.4768	0.4804	5W
Ring 2A	**361142010**	**361142030**	$171.00	**361142050**	$342.00	7/16"	7/16"	0.4757	0.4720	3T
Ring 3A	**361142020**	**361142040**	$171.00	**361142060**	$342.00	7/16"	7/16"	0.4768	0.4740	3T
Set Plug 2A	**371142010**	**371142030**	$154.00	**371142050**	$324.00	1"	1"	0.4757	0.4720	2
Set Plug 3A	**371142020**	**371142040**	$154.00	**371142060**	$324.00	1"	1"	0.4768	0.4740	2
1/2-32 UN										
Taperlock Plug 2B	**301143010**	**301143020**	$131.00	**301143040**	$278.00	3/4"	3/8"	0.4797	0.4842	2
Taperlock Plug 3B	**301143010**	**301143030**	$131.00	**301143050**	$278.00	3/4"	3/8"	0.4797	0.4831	2
Ring 2A	**361143010**	**361143030**	$341.00	**361143050**	$682.00	7/16"	7/16"	0.4787	0.4752	3T
Ring 3A	**361143020**	**361143040**	$341.00	**361143060**	$682.00	7/16"	7/16"	0.4797	0.4771	3T
Set Plug 2A	**371143010**	**371143030**	$186.00	**371143050**	$388.00	1"	1"	0.4787	0.4752	2
Set Plug 3A	**371143020**	**371143040**	$186.00	**371143060**	$388.00	1"	1"	0.4797	0.4771	2
9/16-12 UNC										
Taperlock Plug 2B	**301143510**	**301143520**	$59.00	**301143540**	$134.00	7/8"	1/2"	0.5084	0.5152	3
Taperlock Plug 3B	**301143510**	**301143530**	$59.00	**301143550**	$134.00	7/8"	1/2"	0.5084	0.5135	3
Reversible Plug 2B	**311143510**	**311143520**	$76.00	**311143540**	$183.00	1-1/2"	1-3/8"	0.5084	0.5152	6W
Reversible Plug 3B	**311143510**	**311143530**	$76.00	**311143550**	$183.00	1-1/2"	1-3/8"	0.5084	0.5135	6W
STI Plug 2B	**321143510**	**321143520**	$81.00	**321143540**	$178.00	7/8"	1/2"	0.6167	0.6225	3
STI Plug 3B	**321143510**	**321143530**	$81.00	**321143550**	$178.00	7/8"	1/2"	0.6167	0.6208	3
Ring 2A	**361143510**	**361143530**	$151.00	**361143550**	$302.00	3/4"	9/16"	0.5068	0.5016	4T
Ring 3A	**361143520**	**361143540**	$151.00	**361143560**	$302.00	3/4"	9/16"	0.5084	0.5045	4T
Set Plug 2A	**371143510**	**371143530**	$119.00	**371143550**	$254.00	1-7/8"	1-1/4"	0.5068	0.5016	3
Set Plug 3A	**371143520**	**371143540**	$119.00	**371143560**	$254.00	1-7/8"	1-1/4"	0.5084	0.5045	3

Standard Thread Gages

INCH	Part No. Go Member	Part No. NoGo Member	Price	Part No. Go/NoGo Set	Price	Gage length Go (Min)	Gage length NoGo (Min)	Pitch Diameters Go	Pitch Diameters NoGo	Handle No.
9/16-16 UN										
Taperlock Plug 2B	**301144010**	**301144020**	$114.00	**301144040**	$244.00	7/8"	1/2"	0.5219	0.5280	3
Taperlock Plug 3B	**301144010**	**301144030**	$114.00	**301144050**	$244.00	7/8"	1/2"	0.5219	0.5265	3
Ring 2A	**361144010**	**361144030**	$306.00	**361144050**	$612.00	9/16"	9/16"	0.5205	0.5158	4T
Ring 3A	**361144020**	**361144040**	$306.00	**361144060**	$612.00	9/16"	9/16"	0.5219	0.5184	4T
Set Plug 2A	**371144010**	**371144030**	$161.00	**371144050**	$338.00	1-1/4"	1-1/4"	0.5205	0.5158	3
Set Plug 3A	**371144020**	**371144040**	$161.00	**371144060**	$338.00	1-1/4"	1-1/4"	0.5219	0.5184	3
9/16-18 UNF										
Taperlock Plug 2B	**301144510**	**301144520**	$59.00	**301144540**	$134.00	7/8"	1/2"	0.5264	0.5323	3
Taperlock Plug 3B	**301144510**	**301144530**	$59.00	**301144550**	$134.00	7/8"	1/2"	0.5264	0.5308	3
Reversible Plug 2B	**311144510**	**311144520**	$76.00	**311144540**	$183.00	1-1/2"	1-3/8"	0.5264	0.5323	6W
Reversible Plug 3B	**311144510**	**311144530**	$76.00	**311144550**	$183.00	1-1/2"	1-3/8"	0.5264	0.5308	6W
STI Plug 2B	**321144510**	**321144520**	$81.00	**321144540**	$178.00	7/8"	1/2"	0.5986	0.6035	3
STI Plug 3B	**321144510**	**321144530**	$81.00	**321144550**	$178.00	7/8"	1/2"	0.5986	0.6020	3
Ring 2A	**361144510**	**361144530**	$151.00	**361144550**	$302.00	9/16"	9/16"	0.5250	0.5205	4T
Ring 3A	**361144520**	**361144540**	$151.00	**361144560**	$302.00	9/16"	9/16"	0.5264	0.5230	4T
Set Plug 2A	**371144510**	**371144530**	$119.00	**371144550**	$254.00	1-1/4"	1-1/4"	0.5250	0.5205	3
Set Plug 3A	**371144520**	**371144540**	$119.00	**371144560**	$254.00	1-1/4"	1-1/4"	0.5264	0.5230	3
9/16-20 UN										
Taperlock Plug 2B	**301145010**	**301145020**	$114.00	**301145040**	$244.00	7/8"	1/2"	0.5300	0.5355	3
Taperlock Plug 3B	**301145010**	**301145030**	$114.00	**301145050**	$244.00	7/8"	1/2"	0.5300	0.5341	3
Ring 2A	**361145010**	**361145030**	$306.00	**361145050**	$612.00	9/16"	9/16"	0.5287	0.5245	4T
Ring 3A	**361145020**	**361145040**	$306.00	**361145060**	$612.00	9/16"	9/16"	0.5300	0.5268	4T
Set Plug 2A	**371145010**	**371145030**	$161.00	**371145050**	$338.00	1-1/4"	1-1/4"	0.5287	0.5245	3
Set Plug 3A	**371145020**	**371145040**	$161.00	**371145060**	$338.00	1-1/4"	1-1/4"	0.5300	0.5268	3
9/16-24 UNEF										
Taperlock Plug 2B	**301145510**	**301145520**	$94.00	**301145540**	$204.00	7/8"	1/2"	0.5354	0.5405	3
Taperlock Plug 3B	**301145510**	**301145530**	$94.00	**301145550**	$204.00	7/8"	1/2"	0.5354	0.5392	3
Reversible Plug 2B	**311145510**	**311145520**	$135.00	**311145540**	$301.00	1-1/2"	1-3/8"	0.5354	0.5405	6W
Reversible Plug 3B	**311145510**	**311145530**	$135.00	**311145550**	$301.00	1-1/2"	1-3/8"	0.5354	0.5392	6W
Ring 2A	**361145510**	**361145530**	$179.00	**361145550**	$358.00	9/16"	9/16"	0.5342	0.5303	4T
Ring 3A	**361145520**	**361145540**	$179.00	**361145560**	$358.00	9/16"	9/16"	0.5354	0.5325	4T
Set Plug 2A	**371145510**	**371145530**	$174.00	**371145550**	$364.00	1-1/4"	1-1/4"	0.5342	0.5303	3
Set Plug 3A	**371145520**	**371145540**	$174.00	**371145560**	$364.00	1-1/4"	1-1/4"	0.5354	0.5325	3
9/16-28 UN										
Taperlock Plug 2B	**301146010**	**301146020**	$141.00	**301146040**	$298.00	7/8"	1/2"	0.5393	0.5441	3
Taperlock Plug 3B	**301146010**	**301146030**	$141.00	**301146050**	$298.00	7/8"	1/2"	0.5393	0.5429	3
Ring 2A	**361146010**	**361146030**	$343.00	**361146050**	$686.00	9/16"	9/16"	0.5382	0.5345	4T
Ring 3A	**361146020**	**361146040**	$343.00	**361146060**	$686.00	9/16"	9/16"	0.5393	0.5365	4T
Set Plug 2A	**371146010**	**371146030**	$206.00	**371146050**	$428.00	1-1/4"	1-1/4"	0.5382	0.5345	3
Set Plug 3A	**371146020**	**371146040**	$206.00	**371146060**	$428.00	1-1/4"	1-1/4"	0.5393	0.5365	3
9/16-32 UN										
Taperlock Plug 2B	**301146510**	**301146520**	$141.00	**301146540**	$298.00	7/8"	1/2"	0.5422	0.5467	3
Taperlock Plug 3B	**301146510**	**301146530**	$141.00	**301146550**	$298.00	7/8"	1/2"	0.5422	0.5456	3
Ring 2A	**361146510**	**361146530**	$343.00	**361146550**	$686.00	9/16"	9/16"	0.5412	0.5377	4T
Ring 3A	**361146520**	**361146540**	$343.00	**361146560**	$686.00	9/16"	9/16"	0.5422	0.5396	4T
Set Plug 2A	**371146510**	**371146530**	$206.00	**371146550**	$428.00	1-1/4"	1-1/4"	0.5412	0.5377	3
Set Plug 3A	**371146520**	**371146540**	$206.00	**371146560**	$428.00	1-1/4"	1-1/4"	0.5422	0.5396	3
5/8-11 UNC										
Taperlock Plug 2B	**301147010**	**301147020**	$60.00	**301147040**	$136.00	7/8"	1/2"	0.5660	0.5732	3
Taperlock Plug 3B	**301147010**	**301147030**	$60.00	**301147050**	$136.00	7/8"	1/2"	0.5660	0.5714	3
Reversible Plug 2B	**311147010**	**311147020**	$77.00	**311147040**	$185.00	1-1/2"	1-3/8"	0.5660	0.5732	6W
Reversible Plug 3B	**311147010**	**311147030**	$77.00	**311147050**	$185.00	1-1/2"	1-3/8"	0.5660	0.5714	6W
STI Plug 2B	**321147010**	**321147020**	$82.00	**321147040**	$180.00	7/8"	1/2"	0.6841	0.6903	3
STI Plug 3B	**321147010**	**321147030**	$82.00	**321147050**	$180.00	7/8"	1/2"	0.6841	0.6885	3
Ring 2A	**361147010**	**361147030**	$152.00	**361147050**	$304.00	3/4"	9/16"	0.5644	0.5589	4T
Ring 3A	**361147020**	**361147040**	$152.00	**361147060**	$304.00	3/4"	9/16"	0.5660	0.5619	4T
Set Plug 2A	**371147010**	**371147030**	$120.00	**371147050**	$256.00	1-7/8"	1-1/4"	0.5644	0.5589	3
Set Plug 3A	**371147020**	**371147040**	$120.00	**371147060**	$256.00	1-7/8"	1-1/4"	0.5660	0.5619	3

Standard Thread Gages

INCH	Part No. Go Member	Part No. NoGo Member	Price	Part No. Go/NoGo Set	Price	Gage length Go (Min)	Gage length NoGo (Min)	Pitch Diameters Go	Pitch Diameters NoGo	Handle No.
5/8-12 UN										
Taperlock Plug 2B	**301147310**	**301147320**	$118.00	**301147340**	$252.00	7/8"	1/2"	0.5709	0.5780	3
Taperlock Plug 3B	**301147310**	**301147330**	$118.00	**301147350**	$252.00	7/8"	1/2"	0.5709	0.5762	3
Ring 2A	**361147310**	**361147330**	$310.00	**361147350**	$620.00	9/16"	9/16"	0.5693	0.5639	4T
Ring 3A	**361147320**	**361147340**	$310.00	**361147360**	$620.00	9/16"	9/16"	0.5709	0.5668	4T
Set Plug 2A	**371147310**	**371147330**	$169.00	**371147350**	$354.00	1-1/4"	1-1/4"	0.5693	0.5639	3
Set Plug 3A	**371147320**	**371147340**	$169.00	**371147360**	$354.00	1-1/4"	1-1/4"	0.5709	0.5668	3
5/8-16 UN										
Taperlock Plug 2B	**301147710**	**301147720**	$118.00	**301147740**	$252.00	7/8"	1/2"	0.5844	0.5906	3
Taperlock Plug 3B	**301147710**	**301147730**	$118.00	**301147750**	$252.00	7/8"	1/2"	0.5844	0.5890	3
Ring 2A	**361147710**	**361147730**	$305.00	**361147750**	$610.00	9/16"	9/16"	0.5830	0.5782	4T
Ring 3A	**361147720**	**361147740**	$305.00	**361147760**	$610.00	9/16"	9/16"	0.5844	0.5808	4T
Set Plug 2A	**371147710**	**371147730**	$169.00	**371147750**	$354.00	1-1/4"	1-1/4"	0.5830	0.5782	3
Set Plug 3A	**371147720**	**371147740**	$169.00	**371147760**	$354.00	1-1/4"	1-1/4"	0.5844	0.5808	3
5/8-18 UNF										
Taperlock Plug 2B	**301148010**	**301148020**	$60.00	**301148040**	$136.00	7/8"	1/2"	0.5889	0.5949	3
Taperlock Plug 3B	**301148010**	**301148030**	$60.00	**301148050**	$136.00	7/8"	1/2"	0.5889	0.5934	3
Reversible Plug 2B	**311148010**	**311148020**	$77.00	**311148040**	$185.00	1-1/2"	1-3/8"	0.5889	0.5949	6W
Reversible Plug 3B	**311148010**	**311148030**	$77.00	**311148050**	$185.00	1-1/2"	1-3/8"	0.5889	0.5934	6W
STI Plug 2B	**321148010**	**321148020**	$82.00	**321148040**	$180.00	7/8"	1/2"	0.6611	0.6661	3
STI Plug 3B	**321148010**	**321148030**	$82.00	**321148050**	$180.00	7/8"	1/2"	0.6611	0.6646	3
Ring 2A	**361148010**	**361148030**	$152.00	**361148050**	$304.00	9/16"	9/16"	0.5875	0.5828	4T
Ring 3A	**361148020**	**361148040**	$152.00	**361148060**	$304.00	9/16"	9/16"	0.5889	0.5854	4T
Set Plug 2A	**371148010**	**371148030**	$120.00	**371148050**	$256.00	1-1/4"	1-1/4"	0.5875	0.5828	3
Set Plug 3A	**371148020**	**371148040**	$120.00	**371148060**	$256.00	1-1/4"	1-1/4"	0.5889	0.5854	3
5/8-20 UN										
Taperlock Plug 2B	**301148510**	**301148520**	$118.00	**301148540**	$252.00	7/8"	1/2"	0.5925	0.5981	3
Taperlock Plug 3B	**301148510**	**301148530**	$118.00	**301148550**	$252.00	7/8"	1/2"	0.5925	0.5967	3
Ring 2A	**361148510**	**361148530**	$310.00	**361148550**	$620.00	9/16"	9/16"	0.5912	0.5869	4T
Ring 3A	**361148520**	**361148540**	$310.00	**361148560**	$620.00	9/16"	9/16"	0.5925	0.5893	4T
Set Plug 2A	**371148510**	**371148530**	$169.00	**371148550**	$354.00	1-1/4"	1-1/4"	0.5912	0.5869	3
Set Plug 3A	**371148520**	**371148540**	$169.00	**371148560**	$354.00	1-1/4"	1-1/4"	0.5925	0.5893	3
5/8-24 UNEF										
Taperlock Plug 2B	**301149010**	**301149020**	$95.00	**301149040**	$206.00	7/8"	1/2"	0.5979	0.6031	3
Taperlock Plug 3B	**301149010**	**301149030**	$95.00	**301149050**	$206.00	7/8"	1/2"	0.5979	0.6018	3
Reversible Plug 2B	**311149010**	**311149020**	$136.00	**311149040**	$303.00	1-1/2"	1-3/8"	0.5979	0.6031	6W
Reversible Plug 3B	**311149010**	**311149030**	$136.00	**311149050**	$303.00	1-1/2"	1-3/8"	0.5979	0.6018	6W
Ring 2A	**361149010**	**361149030**	$185.00	**361149050**	$370.00	9/16"	9/16"	0.5967	0.5927	4T
Ring 3A	**361149020**	**361149040**	$185.00	**361149060**	$370.00	9/16"	9/16"	0.5979	0.5949	4T
Set Plug 2A	**371149010**	**371149030**	$176.00	**371149050**	$368.00	1-1/4"	1-1/4"	0.5967	0.5927	3
Set Plug 3A	**371149020**	**371149040**	$176.00	**371149060**	$368.00	1-1/4"	1-1/4"	0.5979	0.5949	3
5/8-28 UN										
Taperlock Plug 2B	**301149310**	**301149320**	$142.00	**301149340**	$300.00	7/8"	1/2"	0.6018	0.6067	3
Taperlock Plug 3B	**301149310**	**301149330**	$142.00	**301149350**	$300.00	7/8"	1/2"	0.6018	0.6055	3
Ring 2A	**361149310**	**361149330**	$385.00	**361149350**	$770.00	9/16"	9/16"	0.6007	0.5969	4T
Ring 3A	**361149320**	**361149340**	$385.00	**361149360**	$770.00	9/16"	9/16"	0.6018	0.5990	4T
Set Plug 2A	**371149310**	**371149330**	$208.00	**371149350**	$432.00	1-1/4"	1-1/4"	0.6007	0.5969	3
Set Plug 3A	**371149320**	**371149340**	$208.00	**371149360**	$432.00	1-1/4"	1-1/4"	0.6018	0.5990	3
5/8-32 UN										
Taperlock Plug 2B	**301149710**	**301149720**	$142.00	**301149740**	$300.00	7/8"	1/2"	0.6047	0.6093	3
Taperlock Plug 3B	**301149710**	**301149730**	$142.00	**301149750**	$300.00	7/8"	1/2"	0.6047	0.6082	3
Ring 2A	**361149710**	**361149730**	$385.00	**361149750**	$770.00	9/16"	9/16"	0.6036	0.6000	4T
Ring 3A	**361149720**	**361149740**	$385.00	**361149760**	$770.00	9/16"	9/16"	0.6047	0.6020	4T
Set Plug 2A	**371149710**	**371149730**	$205.00	**371149750**	$426.00	1-1/4"	1-1/4"	0.6036	0.6000	3
Set Plug 3A	**371149720**	**371149740**	$205.00	**371149760**	$426.00	1-1/4"	1-1/4"	0.6047	0.6020	3

Standard Thread Gages

INCH	Part No. Go Member	Part No. NoGo Member	Price	Part No. Go/NoGo Set	Price	Gage length Go (Min)	Gage length NoGo (Min)	Pitch Diameters Go	Pitch Diameters NoGo	Handle No.
11/16-12 UN										
Taperlock Plug 2B	**301150010**	**301150020**	$118.00	**301150040**	$252.00	7/8"	1/2"	0.6334	0.6405	3
Taperlock Plug 3B	**301150010**	**301150030**	$118.00	**301150050**	$252.00	7/8"	1/2"	0.6334	0.6387	3
Ring 2A	**361150010**	**361150030**	$317.00	**361150050**	$634.00	9/16"	9/16"	0.6318	0.6264	4T
Ring 3A	**361150020**	**361150040**	$317.00	**361150060**	$634.00	9/16"	9/16"	0.6334	0.6293	4T
Set Plug 2A	**371150010**	**371150030**	$169.00	**371150050**	$354.00	1-1/4"	1-1/4"	0.6318	0.6264	3
Set Plug 3A	**371150020**	**371150040**	$169.00	**371150060**	$354.00	1-1/4"	1-1/4"	0.6334	0.6293	3
11/16-16 UN										
Taperlock Plug 2B	**301150110**	**301150120**	$118.00	**301150140**	$252.00	7/8"	1/2"	0.6469	0.6531	3
Taperlock Plug 3B	**301150110**	**301150130**	$118.00	**301150150**	$252.00	7/8"	1/2"	0.6469	0.6515	3
Ring 2A	**361150110**	**361150130**	$317.00	**361150150**	$634.00	9/16"	9/16"	0.6455	0.6407	4T
Ring 3A	**361150120**	**361150140**	$317.00	**361150160**	$634.00	9/16"	9/16"	0.6469	0.6433	4T
Set Plug 2A	**371150110**	**371150130**	$169.00	**371150150**	$354.00	1-1/4"	1-1/4"	0.6455	0.6407	3
Set Plug 3A	**371150120**	**371150140**	$169.00	**371150160**	$354.00	1-1/4"	1-1/4"	0.6469	0.6433	3
11/16-20 UN										
Taperlock Plug 2B	**301150310**	**301150320**	$131.00	**301150340**	$278.00	7/8"	1/2"	0.6550	0.6606	3
Taperlock Plug 3B	**301150310**	**301150330**	$131.00	**301150350**	$278.00	7/8"	1/2"	0.6550	0.6592	3
Ring 2A	**361150310**	**361150330**	$324.00	**361150350**	$648.00	9/16"	9/16"	0.6537	0.6494	4T
Ring 3A	**361150320**	**361150340**	$324.00	**361150360**	$648.00	9/16"	9/16"	0.6550	0.6518	4T
Set Plug 2A	**371150310**	**371150330**	$187.00	**371150350**	$390.00	1-1/4"	1-1/4"	0.6537	0.6494	3
Set Plug 3A	**371150320**	**371150340**	$187.00	**371150360**	$390.00	1-1/4"	1-1/4"	0.6550	0.6518	3
11/16-24 UNEF										
Taperlock Plug 2B	**301150510**	**301150520**	$98.00	**301150540**	$212.00	7/8"	1/2"	0.6604	0.6656	3
Taperlock Plug 3B	**301150510**	**301150530**	$98.00	**301150550**	$212.00	7/8"	1/2"	0.6604	0.6643	3
Reversible Plug 2B	**311150510**	**311150520**	$137.00	**311150540**	$307.00	1-3/4"	1-3/8"	0.6604	0.6656	7W
Reversible Plug 3B	**311150510**	**311150530**	$137.00	**311150550**	$307.00	1-3/4"	1-3/8"	0.6604	0.6643	7W
Ring 2A	**361150510**	**361150530**	$206.00	**361150550**	$412.00	9/16"	9/16"	0.6592	0.6552	4T
Ring 3A	**361150520**	**361150540**	$206.00	**361150560**	$412.00	9/16"	9/16"	0.6604	0.6574	4T
Set Plug 2A	**371150510**	**371150530**	$184.00	**371150550**	$384.00	1-1/4"	1-1/4"	0.6592	0.6552	3
Set Plug 3A	**371150520**	**371150540**	$184.00	**371150560**	$384.00	1-1/4"	1-1/4"	0.6604	0.6574	3
11/16-28 UN										
Taperlock Plug 2B	**301151010**	**301151020**	$154.00	**301151040**	$324.00	7/8"	1/2"	0.6643	0.6692	3
Taperlock Plug 3B	**301151010**	**301151030**	$154.00	**301151050**	$324.00	7/8"	1/2"	0.6643	0.6680	3
Ring 2A	**361151010**	**361151030**	$398.00	**361151050**	$796.00	9/16"	9/16"	0.6632	0.6594	4T
Ring 3A	**361151020**	**361151040**	$398.00	**361151060**	$796.00	9/16"	9/16"	0.6643	0.6615	4T
Set Plug 2A	**371151010**	**371151030**	$220.00	**371151050**	$456.00	1-1/4"	1-1/4"	0.6632	0.6594	3
Set Plug 3A	**371151020**	**371151040**	$220.00	**371151060**	$456.00	1-1/4"	1-1/4"	0.6643	0.6615	3
11/16-32 UN										
Taperlock Plug 2B	**301151510**	**301151520**	$154.00	**301151540**	$324.00	7/8"	1/2"	0.6672	0.6718	3
Taperlock Plug 3B	**301151510**	**301151530**	$154.00	**301151550**	$324.00	7/8"	1/2"	0.6672	0.6707	3
Ring 2A	**361151510**	**361151530**	$398.00	**361151550**	$796.00	9/16"	9/16"	0.6661	0.6625	4T
Ring 3A	**361151520**	**361151540**	$398.00	**361151560**	$796.00	9/16"	9/16"	0.6672	0.6645	4T
Set Plug 2A	**371151510**	**371151530**	$225.00	**371151550**	$466.00	1-1/4"	1-1/4"	0.6661	0.6625	3
Set Plug 3A	**371151520**	**371151540**	$225.00	**371151560**	$466.00	1-1/4"	1-1/4"	0.6672	0.6645	3
3/4-10 UNC										
Taperlock Plug 2B	**301152010**	**301152020**	$64.00	**301152040**	$144.00	7/8"	1/2"	0.6850	0.6927	3
Taperlock Plug 3B	**301152010**	**301152030**	$64.00	**301152050**	$144.00	7/8"	1/2"	0.6850	0.6907	3
Reversible Plug 2B	**311152010**	**311152020**	$87.00	**311152040**	$207.00	1-3/4"	1-3/8"	0.6850	0.6927	7W
Reversible Plug 3B	**311152010**	**311152030**	$87.00	**311152050**	$207.00	1-3/4"	1-3/8"	0.6850	0.6907	7W
STI Plug 2B	**321152010**	**321152020**	$91.00	**321152040**	$199.25	1"	5/8"	0.8149	0.8216	4
STI Plug 3B	**321152010**	**321152030**	$91.00	**321152050**	$199.25	1"	5/8"	0.8149	0.8196	4
Ring 2A	**361152010**	**361152030**	$193.00	**361152050**	$386.00	3/4"	9/16"	0.6832	0.6773	4T
Ring 3A	**361152020**	**361152040**	$193.00	**361152060**	$386.00	3/4"	9/16"	0.6850	0.6806	4T
Set Plug 2A	**371152010**	**371152030**	$143.00	**371152050**	$302.00	1-7/8"	1-1/4"	0.6832	0.6773	3
Set Plug 3A	**371152020**	**371152040**	$143.00	**371152060**	$302.00	1-7/8"	1-1/4"	0.6850	0.6806	3

Standard Thread Gages

INCH	Part No. Go Member	Part No. NoGo Member	Price	Part No. Go/NoGo Set	Price	Gage length Go (Min)	Gage length NoGo (Min)	Pitch Diameters Go	Pitch Diameters NoGo	Handle No.
3/4-12 UN										
Taperlock Plug 2B	**301152510**	**301152520**	$118.00	**301152540**	$252.00	7/8"	1/2"	0.6959	0.7031	3
Taperlock Plug 3B	**301152510**	**301152530**	$118.00	**301152550**	$252.00	7/8"	1/2"	0.6959	0.7013	3
Ring 2A	**361152510**	**361152530**	$312.00	**361152550**	$624.00	9/16"	9/16"	0.6942	0.6887	4T
Ring 3A	**361152520**	**361152540**	$312.00	**361152560**	$624.00	9/16"	9/16"	0.6959	0.6918	4T
Set Plug 2A	**371152510**	**371152530**	$169.00	**371152550**	$354.00	1-1/4"	1-1/4"	0.6942	0.6887	3
Set Plug 3A	**371152520**	**371152540**	$169.00	**371152560**	$354.00	1-1/4"	1-1/4"	0.6959	0.6918	3
3/4-16 UNF										
Taperlock Plug 2B	**301153010**	**301153020**	$64.00	**301153040**	$144.00	7/8"	1/2"	0.7094	0.7159	3
Taperlock Plug 3B	**301153010**	**301153030**	$64.00	**301153050**	$144.00	7/8"	1/2"	0.7094	0.7143	3
Reversible Plug 2B	**311153010**	**311153020**	$87.00	**311153040**	$207.00	1-3/4"	1-3/8"	0.7094	0.7159	7W
Reversible Plug 3B	**311153010**	**311153030**	$87.00	**311153050**	$207.00	1-3/4"	1-3/8"	0.7094	0.7143	7W
STI Plug 2B	**321153010**	**321153020**	$91.00	**321153040**	$198.00	7/8"	1/2"	0.7906	0.7961	3
STI Plug 3B	**321153010**	**321153030**	$91.00	**321153050**	$198.00	7/8"	1/2"	0.7906	0.7945	3
Ring 2A	**361153010**	**361153030**	$193.00	**361153050**	$386.00	9/16"	9/16"	0.7079	0.7029	4T
Ring 3A	**361153020**	**361153040**	$193.00	**361153060**	$386.00	9/16"	9/16"	0.7094	0.7056	4T
Set Plug 2A	**371153010**	**371153030**	$143.00	**371153050**	$302.00	1-1/4"	1-1/4"	0.7079	0.7029	3
Set Plug 3A	**371153020**	**371153040**	$143.00	**371153060**	$302.00	1-1/4"	1-1/4"	0.7094	0.7056	3
3/4-20 UNEF										
Taperlock Plug 2B	**301154010**	**301154020**	$95.00	**301154040**	$206.00	7/8"	1/2"	0.7175	0.7232	3
Taperlock Plug 3B	**301154010**	**301154030**	$95.00	**301154050**	$206.00	7/8"	1/2"	0.7175	0.7218	3
Reversible Plug 2B	**311154010**	**311154020**	$137.00	**311154040**	$307.00	1-3/4"	1-3/8"	0.7175	0.7232	7W
Reversible Plug 3B	**311154010**	**311154030**	$137.00	**311154050**	$307.00	1-3/4"	1-3/8"	0.7175	0.7218	7W
Ring 2A	**361154010**	**361154030**	$236.00	**361154050**	$472.00	9/16"	9/16"	0.7162	0.7118	4T
Ring 3A	**361154020**	**361154040**	$236.00	**361154060**	$472.00	9/16"	9/16"	0.7175	0.7142	4T
Set Plug 2A	**371154010**	**371154030**	$185.00	**371154050**	$386.00	1-1/4"	1-1/4"	0.7162	0.7118	3
Set Plug 3A	**371154020**	**371154040**	$185.00	**371154060**	$386.00	1-1/4"	1-1/4"	0.7175	0.7142	3
3/4-28 UN										
Taperlock Plug 2B	**301154310**	**301154320**	$154.00	**301154340**	$324.00	7/8"	1/2"	0.7268	0.7318	3
Taperlock Plug 3B	**301154310**	**301154330**	$154.00	**301154350**	$324.00	7/8"	1/2"	0.7268	0.7305	3
Ring 2A	**361154310**	**361154330**	$392.00	**361154350**	$784.00	9/16"	9/16"	0.7256	0.7218	4T
Ring 3A	**361154320**	**361154340**	$392.00	**361154360**	$784.00	9/16"	9/16"	0.7268	0.7239	4T
Set Plug 2A	**371154310**	**371154330**	$225.00	**371154350**	$466.00	1-1/4"	1-1/4"	0.7256	0.7218	3
Set Plug 3A	**371154320**	**371154340**	$225.00	**371154360**	$466.00	1-1/4"	1-1/4"	0.7268	0.7239	3
3/4-32 UN										
Taperlock Plug 2B	**301154510**	**301154520**	$154.00	**301154540**	$324.00	7/8"	1/2"	0.7297	0.7344	3
Taperlock Plug 3B	**301154510**	**301154530**	$154.00	**301154550**	$324.00	7/8"	1/2"	0.7297	0.7333	3
Ring 2A	**361154510**	**361154530**	$392.00	**361154550**	$784.00	9/16"	9/16"	0.7286	0.7250	4T
Ring 3A	**361154520**	**361154540**	$392.00	**361154560**	$784.00	9/16"	9/16"	0.7297	0.7270	4T
Set Plug 2A	**371154510**	**371154530**	$225.00	**371154550**	$466.00	1-1/4"	1-1/4"	0.7286	0.7250	3
Set Plug 3A	**371154520**	**371154540**	$225.00	**371154560**	$466.00	1-1/4"	1-1/4"	0.7297	0.7270	3
13/16-12 UN										
Taperlock Plug 2B	**301155010**	**301155020**	$123.00	**301155040**	$262.00	1"	5/8"	0.7584	0.7656	3
Taperlock Plug 3B	**301155010**	**301155030**	$123.00	**301155050**	$262.00	1"	5/8"	0.7584	0.7638	3
Ring 2A	**361155010**	**361155030**	$328.00	**361155050**	$656.00	9/16"	9/16"	0.7567	0.7512	4T
Ring 3A	**361155020**	**361155040**	$328.00	**361155060**	$656.00	9/16"	9/16"	0.7584	0.7543	4T
Set Plug 2A	**371155010**	**371155030**	$173.00	**371155050**	$362.00	1-1/4"	1-1/4"	0.7567	0.7512	3
Set Plug 3A	**371155020**	**371155040**	$173.00	**371155060**	$362.00	1-1/4"	1-1/4"	0.7584	0.7543	3
13/16-16 UN										
Taperlock Plug 2B	**301155310**	**301155320**	$123.00	**301155340**	$262.00	1"	5/8"	0.7719	0.7782	3
Taperlock Plug 3B	**301155310**	**301155330**	$123.00	**301155350**	$262.00	1"	5/8"	0.7719	0.7766	3
Ring 2A	**361155310**	**361155330**	$328.00	**361155350**	$656.00	9/16"	9/16"	0.7704	0.7655	4T
Ring 3A	**361155320**	**361155340**	$328.00	**361155360**	$656.00	9/16"	9/16"	0.7719	0.7683	4T
Set Plug 2A	**371155310**	**371155330**	$173.00	**371155350**	$362.00	1-1/4"	1-1/4"	0.7704	0.7655	3
Set Plug 3A	**371155320**	**371155340**	$173.00	**371155360**	$362.00	1-1/4"	1-1/4"	0.7719	0.7683	3

Standard Thread Gages

INCH	Part No. Go Member	Part No. NoGo Member	Price	Part No. Go/NoGo Set	Price	Gage length Go (Min)	Gage length NoGo (Min)	Pitch Diameters Go	Pitch Diameters NoGo	Handle No.
13/16-20 UNEF										
Taperlock Plug 2B	**301155510**	**301155520**	$102.00	**301155540**	$220.00	1"	5/8"	0.7800	0.7857	3
Taperlock Plug 3B	**301155510**	**301155530**	$102.00	**301155550**	$220.00	1"	5/8"	0.7800	0.7843	3
Ring 2A	**361155510**	**361155530**	$245.00	**361155550**	$490.00	9/16"	9/16"	0.7787	0.7743	4T
Ring 3A	**361155520**	**361155540**	$245.00	**361155560**	$490.00	9/16"	9/16"	0.7800	0.7767	4T
Set Plug 2A	**371155510**	**371155530**	$206.00	**371155550**	$428.00	1-1/4"	1-1/4"	0.7787	0.7743	3
Set Plug 3A	**371155520**	**371155540**	$206.00	**371155560**	$428.00	1-1/4"	1-1/4"	0.7800	0.7767	3
13/16-28 UN										
Taperlock Plug 2B	**301156010**	**301156020**	$161.00	**301156040**	$338.00	1"	5/8"	0.7893	0.7943	3
Taperlock Plug 3B	**301156010**	**301156030**	$161.00	**301156050**	$338.00	1"	5/8"	0.7893	0.7930	3
Ring 2A	**361156010**	**361156030**	$410.00	**361156050**	$820.00	9/16"	9/16"	0.7881	0.7843	4T
Ring 3A	**361156020**	**361156040**	$410.00	**361156060**	$820.00	9/16"	9/16"	0.7893	0.7864	4T
Set Plug 2A	**371156010**	**371156030**	$232.00	**371156050**	$480.00	1-1/4"	1-1/4"	0.7881	0.7843	3
Set Plug 3A	**371156020**	**371156040**	$232.00	**371156060**	$480.00	1-1/4"	1-1/4"	0.7893	0.7864	3
13/16-32 UN										
Taperlock Plug 2B	**301156510**	**301156520**	$161.00	**301156540**	$338.00	7/8"	1/2"	0.7922	0.7969	3
Taperlock Plug 3B	**301156510**	**301156530**	$161.00	**301156550**	$338.00	7/8"	1/2"	0.7922	0.7958	3
Ring 2A	**361156510**	**361156530**	$410.00	**361156550**	$820.00	9/16"	9/16"	0.7911	0.7875	4T
Ring 3A	**361156520**	**361156540**	$410.00	**361156560**	$820.00	9/16"	9/16"	0.7922	0.7895	4T
Set Plug 2A	**371156510**	**371156530**	$232.00	**371156550**	$480.00	1-1/4"	1-1/4"	0.7911	0.7875	3
Set Plug 3A	**371156520**	**371156540**	$232.00	**371156560**	$480.00	1-1/4"	1-1/4"	0.7922	0.7895	3
7/8-9 UNC										
Taperlock Plug 2B	**301157010**	**301157020**	$70.00	**301157040**	$157.25	1"	5/8"	0.8028	0.8110	4
Taperlock Plug 3B	**301157010**	**301157030**	$70.00	**301157050**	$157.25	1"	5/8"	0.8028	0.8089	4
Ring 2A	**361157010**	**361157030**	$212.00	**361157050**	$424.00	15/16"	11/16"	0.8009	0.7946	5T
Ring 3A	**361157020**	**361157040**	$212.00	**361157060**	$424.00	15/16"	11/16"	0.8028	0.7981	5T
Set Plug 2A	**371157010**	**371157030**	$163.00	**371157050**	$343.25	2-1/8"	1-1/2"	0.8009	0.7946	4
Set Plug 3A	**371157020**	**371157040**	$163.00	**371157060**	$343.25	2-1/8"	1-1/2"	0.8028	0.7981	4
7/8-12 UN										
Taperlock Plug 2B	**301157510**	**301157520**	$123.00	**301157540**	$263.25	1"	5/8"	0.8209	0.8281	4
Taperlock Plug 3B	**301157510**	**301157530**	$123.00	**301157550**	$263.25	1"	5/8"	0.8209	0.8263	4
Ring 2A	**361157510**	**361157530**	$325.00	**361157550**	$650.00	11/16"	11/16"	0.8192	0.8137	5T
Ring 3A	**361157520**	**361157540**	$325.00	**361157560**	$650.00	11/16"	11/16"	0.8209	0.8168	5T
Set Plug 2A	**371157510**	**371157530**	$173.00	**371157550**	$363.25	1-1/2"	1-1/2"	0.8192	0.8137	4
Set Plug 3A	**371157520**	**371157540**	$173.00	**371157560**	$363.25	1-1/2"	1-1/2"	0.8209	0.8168	4
7/8-14 UNF										
Taperlock Plug 2B	**301158010**	**301158020**	$70.00	**301158040**	$157.25	1"	5/8"	0.8286	0.8356	4
Taperlock Plug 3B	**301158010**	**301158030**	$70.00	**301158050**	$157.25	1"	5/8"	0.8286	0.8339	4
Ring 2A	**361158010**	**361158030**	$210.00	**361158050**	$420.00	11/16"	11/16"	0.8270	0.8216	5T
Ring 3A	**361158020**	**361158040**	$210.00	**361158060**	$420.00	11/16"	11/16"	0.8286	0.8245	5T
Set Plug 2A	**371158010**	**371158030**	$163.00	**371158050**	$343.25	1-1/2"	1-1/2"	0.8270	0.8216	4
Set Plug 3A	**371158020**	**371158040**	$163.00	**371158060**	$343.25	1-1/2"	1-1/2"	0.8286	0.8245	4
7/8-16 UN										
Taperlock Plug 2B	**301158510**	**301158520**	$123.00	**301158540**	$263.25	1"	5/8"	0.8344	0.8407	4
Taperlock Plug 3B	**301158510**	**301158530**	$123.00	**301158550**	$263.25	1"	5/8"	0.8344	0.8391	4
Ring 2A	**361158510**	**361158530**	$328.00	**361158550**	$656.00	11/16"	11/16"	0.8329	0.8280	5T
Ring 3A	**361158520**	**361158540**	$328.00	**361158560**	$656.00	11/16"	11/16"	0.8344	0.8308	5T
Set Plug 2A	**371158510**	**371158530**	$173.00	**371158550**	$363.25	1-1/2"	1-1/2"	0.8329	0.8280	4
Set Plug 3A	**371158520**	**371158540**	$173.00	**371158560**	$363.25	1-1/2"	1-1/2"	0.8344	0.8308	4
7/8-20 UNEF										
Taperlock Plug 2B	**301159010**	**301159020**	$106.00	**301159040**	$229.25	1"	5/8"	0.8425	0.8482	4
Taperlock Plug 3B	**301159010**	**301159030**	$106.00	**301159050**	$229.25	1"	5/8"	0.8425	0.8468	4
Ring 2A	**361159010**	**361159030**	$245.00	**361159050**	$490.00	11/16"	11/16"	0.8412	0.8368	5T
Ring 3A	**361159020**	**361159040**	$245.00	**361159060**	$490.00	11/16"	11/16"	0.8425	0.8392	5T
Set Plug 2A	**371159010**	**371159030**	$205.00	**371159050**	$427.25	1-1/2"	1-1/2"	0.8412	0.8368	4
Set Plug 3A	**371159020**	**371159040**	$205.00	**371159060**	$427.25	1-1/2"	1-1/2"	0.8425	0.8392	4

Standard Thread Gages

INCH	Part No. Go Member	Part No. NoGo Member	Price	Part No. Go/NoGo Set	Price	Gage length Go (Min)	Gage length NoGo (Min)	Pitch Diameters Go	Pitch Diameters NoGo	Handle No.
7/8-28 UN										
Taperlock Plug 2B	**301159310**	**301159320**	$161.00	**301159340**	$339.25	1"	5/8"	0.8518	0.8568	4
Taperlock Plug 3B	**301159310**	**301159330**	$161.00	**301159350**	$339.25	1"	5/8"	0.8518	0.8555	4
Ring 2A	**361159310**	**361159330**	$410.00	**361159350**	$820.00	11/16"	11/16"	0.8506	0.8468	5T
Ring 3A	**361159320**	**361159340**	$410.00	**361159360**	$820.00	11/16"	11/16"	0.8518	0.8489	5T
Set Plug 2A	**371159310**	**371159330**	$232.00	**371159350**	$481.25	1-1/2"	1-1/2"	0.8506	0.8468	4
Set Plug 3A	**371159320**	**371159340**	$232.00	**371159360**	$481.25	1-1/2"	1-1/2"	0.8518	0.8489	4
7/8-32 UN										
Taperlock Plug 2B	**301159510**	**301159520**	$161.00	**301159540**	$339.25	5/8"	7/16"	0.8547	0.8594	4
Taperlock Plug 3B	**301159510**	**301159530**	$161.00	**301159550**	$339.25	5/8"	7/16"	0.8547	0.8583	4
Ring 2A	**361159510**	**361159530**	$410.00	**361159550**	$820.00	17/32"	17/32"	0.8536	0.8500	5T
Ring 3A	**361159520**	**361159540**	$410.00	**361159560**	$820.00	17/32"	17/32"	0.8547	0.8520	5T
Set Plug 2A	**371159510**	**371159530**	$230.00	**371159550**	$477.25	1-1/8"	1-1/8"	0.8536	0.8500	4
Set Plug 3A	**371159520**	**371159540**	$230.00	**371159560**	$477.25	1-1/8"	1-1/8"	0.8547	0.8520	4
15/16-12 UN										
Taperlock Plug 2B	**301160010**	**301160020**	$132.00	**301160040**	$281.25	1"	5/8"	0.8834	0.8908	4
Taperlock Plug 3B	**301160010**	**301160030**	$132.00	**301160050**	$281.25	1"	5/8"	0.8834	0.8889	4
Ring 2A	**361160010**	**361160030**	$330.00	**361160050**	$660.00	11/16"	11/16"	0.8817	0.8760	5T
Ring 3A	**361160020**	**361160040**	$330.00	**361160060**	$660.00	11/16"	11/16"	0.8834	0.8792	5T
Set Plug 2A	**371160010**	**371160030**	$190.00	**371160050**	$397.25	1-1/2"	1-1/2"	0.8817	0.8760	4
Set Plug 3A	**371160020**	**371160040**	$190.00	**371160060**	$397.25	1-1/2"	1-1/2"	0.8834	0.8792	4
15/16-16 UN										
Taperlock Plug 2B	**301160310**	**301160320**	$132.00	**301160340**	$281.25	1"	5/8"	0.8969	0.9034	4
Taperlock Plug 3B	**301160310**	**301160330**	$132.00	**301160350**	$281.25	1"	5/8"	0.8969	0.9018	4
Ring 2A	**361160310**	**361160330**	$330.00	**361160350**	$660.00	11/16"	11/16"	0.8954	0.8904	5T
Ring 3A	**361160320**	**361160340**	$330.00	**361160360**	$660.00	11/16"	11/16"	0.8969	0.8932	5T
Set Plug 2A	**371160310**	**371160330**	$190.00	**371160350**	$397.25	1-1/2"	1-1/2"	0.8954	0.8904	4
Set Plug 3A	**371160320**	**371160340**	$190.00	**371160360**	$397.25	1-1/2"	1-1/2"	0.8969	0.8932	4
15/16-20 UNEF										
Taperlock Plug 2B	**301160510**	**301160520**	$108.00	**301160540**	$233.25	1"	5/8"	0.9050	0.9109	4
Taperlock Plug 3B	**301160510**	**301160530**	$108.00	**301160550**	$233.25	1"	5/8"	0.9050	0.9094	4
Ring 2A	**361160510**	**361160530**	$255.00	**361160550**	$510.00	11/16"	11/16"	0.9036	0.8991	5T
Ring 3A	**361160520**	**361160540**	$255.00	**361160560**	$510.00	11/16"	11/16"	0.9050	0.9016	5T
Set Plug 2A	**371160510**	**371160530**	$205.00	**371160550**	$427.25	1-1/2"	1-1/2"	0.9036	0.8991	4
Set Plug 3A	**371160520**	**371160540**	$205.00	**371160560**	$427.25	1-1/2"	1-1/2"	0.9050	0.9016	4
15/16-28 UN										
Taperlock Plug 2B	**301161010**	**301161020**	$169.00	**301161040**	$355.25	1"	5/8"	0.9143	0.9195	4
Taperlock Plug 3B	**301161010**	**301161030**	$169.00	**301161050**	$355.25	1"	5/8"	0.9143	0.9182	4
Ring 2A	**361161010**	**361161030**	$421.00	**361161050**	$842.00	11/16"	11/16"	0.9131	0.9091	5T
Ring 3A	**361161020**	**361161040**	$421.00	**361161060**	$842.00	11/16"	11/16"	0.9143	0.9113	5T
Set Plug 2A	**371161010**	**371161030**	$244.00	**371161050**	$505.25	1-1/2"	1-1/2"	0.9131	0.9091	4
Set Plug 3A	**371161020**	**371161040**	$244.00	**371161060**	$505.25	1-1/2"	1-1/2"	0.9143	0.9113	4
15/16-32 UN										
Taperlock Plug 2B	**301161510**	**301161520**	$169.00	**301161540**	$355.25	5/8"	7/16"	0.9172	0.9221	4
Taperlock Plug 3B	**301161510**	**301161530**	$169.00	**301161550**	$355.25	5/8"	7/16"	0.9172	0.9209	4
Ring 2A	**361161510**	**361161530**	$421.00	**361161550**	$842.00	17/32"	17/32"	0.9161	0.9123	5T
Ring 3A	**361161520**	**361161540**	$421.00	**361161560**	$842.00	17/32"	17/32"	0.9172	0.9144	5T
Set Plug 2A	**371161510**	**371161530**	$240.00	**371161550**	$497.25	1-1/8"	1-1/8"	0.9161	0.9123	4
Set Plug 3A	**371161520**	**371161540**	$240.00	**371161560**	$497.25	1-1/8"	1-1/8"	0.9172	0.9144	4
1-8 UNC										
Taperlock Plug 2B	**301162010**	**301162020**	$82.00	**301162040**	$181.25	1"	5/8"	0.9188	0.9276	4
Taperlock Plug 3B	**301162010**	**301162030**	$82.00	**301162050**	$181.25	1"	5/8"	0.9188	0.9254	4
Ring 2A	**361162010**	**361162030**	$255.00	**361162050**	$510.00	15/16"	11/16"	0.9168	0.9100	5T
Ring 3A	**361162020**	**361162040**	$255.00	**361162060**	$510.00	15/16"	11/16"	0.9188	0.9137	5T
Set Plug 2A	**371162010**	**371162030**	$186.00	**371162050**	$389.25	2-1/8"	1-1/2"	0.9168	0.9100	4
Set Plug 3A	**371162020**	**371162040**	$186.00	**371162060**	$389.25	2-1/8"	1-1/2"	0.9188	0.9137	4

Standard Thread Gages

INCH	Part No. Go Member	Part No. NoGo Member	Price	Part No. Go/NoGo Set	Price	Gage length Go (Min)	Gage length NoGo (Min)	Pitch Diameters Go	Pitch Diameters NoGo	Handle No.
1-12 UNF										
Taperlock Plug 2B	**301163010**	**301163020**	$82.00	**301163040**	$181.25	1"	5/8"	0.9459	0.9535	4
Taperlock Plug 3B	**301163010**	**301163030**	$82.00	**301163050**	$181.25	1"	5/8"	0.9459	0.9516	4
Ring 2A	**361163010**	**361163030**	$255.00	**361163050**	$510.00	11/16"	11/16"	0.9441	0.9382	5T
Ring 3A	**361163020**	**361163040**	$255.00	**361163060**	$510.00	11/16"	11/16"	0.9459	0.9415	5T
Set Plug 2A	**371163010**	**371163030**	$186.00	**371163050**	$389.25	1-1/2"	1-1/2"	0.9441	0.9382	4
Set Plug 3A	**371163020**	**371163040**	$186.00	**371163060**	$389.25	1-1/2"	1-1/2"	0.9459	0.9415	4
1-14 UNS										
Taperlock Plug 2B	**301164010**	**301164120**	$82.00	**301164140**	$181.25	1"	5/8"	0.9536	0.9605	4
Taperlock Plug 3B	**301164010**	**301164130**	$82.00	**301164150**	$181.25	1"	5/8"	0.9536	0.9588	4
Ring 2A	**361164110**	**361164130**	$255.00	**361164150**	$510.00	11/16"	11/16"	0.9520	0.9467	5T
Ring 3A	**361164020**	**361164140**	$255.00	**361164160**	$510.00	11/16"	11/16"	0.9536	0.9496	5T
Set Plug 2A	**371164110**	**371164130**	$186.00	**371164150**	$389.25	1-1/2"	1-1/2"	0.9520	0.9467	4
Set Plug 3A	**371164020**	**371164140**	$186.00	**371164160**	$389.25	1-1/2"	1-1/2"	0.9536	0.9496	4
1-16 UN										
Taperlock Plug 2B	**301164510**	**301164520**	$132.00	**301164540**	$281.25	1"	5/8"	0.9594	0.9659	4
Taperlock Plug 3B	**301164510**	**301164530**	$132.00	**301164550**	$281.25	1"	5/8"	0.9594	0.9643	4
Ring 2A	**361164510**	**361164530**	$330.00	**361164550**	$660.00	11/16"	11/16"	0.9579	0.9529	5T
Ring 3A	**361164520**	**361164540**	$330.00	**361164560**	$660.00	11/16"	11/16"	0.9594	0.9557	5T
Set Plug 2A	**371164510**	**371164530**	$190.00	**371164550**	$397.25	1-1/2"	1-1/2"	0.9579	0.9529	4
Set Plug 3A	**371164520**	**371164540**	$190.00	**371164560**	$397.25	1-1/2"	1-1/2"	0.9594	0.9557	4
1-20 UNEF										
Taperlock Plug 2B	**301165010**	**301165020**	$118.00	**301165040**	$253.25	1"	5/8"	0.9675	0.9734	4
Taperlock Plug 3B	**301165010**	**301165030**	$118.00	**301165050**	$253.25	1"	5/8"	0.9675	0.9719	4
Ring 2A	**361165010**	**361165030**	$285.00	**361165050**	$570.00	11/16"	11/16"	0.9661	0.9616	5T
Ring 3A	**361165020**	**361165040**	$285.00	**361165060**	$570.00	11/16"	11/16"	0.9675	0.9641	5T
Set Plug 2A	**371165010**	**371165030**	$210.00	**371165050**	$437.25	1-1/2"	1-1/2"	0.9661	0.9616	4
Set Plug 3A	**371165020**	**371165040**	$210.00	**371165060**	$437.25	1-1/2"	1-1/2"	0.9675	0.9641	4
1-28 UN										
Taperlock Plug 2B	**301165310**	**301165320**	$169.00	**301165340**	$355.25	1"	5/8"	0.9768	0.9820	4
Taperlock Plug 3B	**301165310**	**301165330**	$169.00	**301165350**	$355.25	1"	5/8"	0.9768	0.9807	4
Ring 2A	**361165310**	**361165330**	$421.00	**361165350**	$842.00	11/16"	11/16"	0.9756	0.9716	5T
Ring 3A	**361165320**	**361165340**	$421.00	**361165360**	$842.00	11/16"	11/16"	0.9768	0.9738	5T
Set Plug 2A	**371165310**	**371165330**	$240.00	**371165350**	$497.25	1-1/2"	1-1/2"	0.9756	0.9716	4
Set Plug 3A	**371165320**	**371165340**	$240.00	**371165360**	$497.25	1-1/2"	1-1/2"	0.9768	0.9738	4
1-32 UN										
Taperlock Plug 2B	**301165510**	**301165520**	$169.00	**301165540**	$355.25	5/8"	7/16"	0.9797	0.9846	4
Taperlock Plug 3B	**301165510**	**301165530**	$169.00	**301165550**	$355.25	5/8"	7/16"	0.9797	0.9834	4
Ring 2A	**361165510**	**361165530**	$421.00	**361165550**	$842.00	17/32"	17/32"	0.9786	0.9748	5T
Ring 3A	**361165520**	**361165540**	$421.00	**361165560**	$842.00	17/32"	17/32"	0.9797	0.9769	5T
Set Plug 2A	**371165510**	**371165530**	$240.00	**371165550**	$497.25	1-1/8"	1-1/8"	0.9786	0.9748	4
Set Plug 3A	**371165520**	**371165540**	$240.00	**371165560**	$497.25	1-1/8"	1-1/8"	0.9797	0.9769	4
1 1/16-8 UN										
Taperlock Plug 2B	**301166010**	**301166020**	$141.00	**301166040**	$299.25	1"	5/8"	0.9813	0.9902	4
Taperlock Plug 3B	**301166010**	**301166030**	$141.00	**301166050**	$299.25	1"	5/8"	0.9813	0.9880	4
Ring 2A	**361166010**	**361166030**	$335.00	**361166050**	$670.00	15/16"	11/16"	0.9793	0.9725	5T
Ring 3A	**361166020**	**361166040**	$335.00	**361166060**	$670.00	15/16"	11/16"	0.9813	0.9762	5T
Set Plug 2A	**371166010**	**371166030**	$205.00	**371166050**	$427.25	2-1/8"	1-1/2"	0.9793	0.9725	4
Set Plug 3A	**371166020**	**371166040**	$205.00	**371166060**	$427.25	2-1/8"	1-1/2"	0.9813	0.9762	4
1 1/16-12 UN										
Taperlock Plug 2B	**301166510**	**301166520**	$141.00	**301166540**	$299.25	1"	5/8"	1.0084	1.0158	4
Taperlock Plug 3B	**301166510**	**301166530**	$141.00	**301166550**	$299.25	1"	5/8"	1.0084	1.0139	4
Ring 2A	**361166510**	**361166530**	$335.00	**361166550**	$670.00	11/16"	11/16"	1.0067	1.0010	5T
Ring 3A	**361166520**	**361166540**	$335.00	**361166560**	$670.00	11/16"	11/16"	1.0084	1.0042	5T
Set Plug 2A	**371166510**	**371166530**	$205.00	**371166550**	$427.25	1-1/2"	1-1/2"	1.0067	1.0010	4
Set Plug 3A	**371166520**	**371166540**	$205.00	**371166560**	$427.25	1-1/2"	1-1/2"	1.0084	1.0042	4

Standard Thread Gages

INCH	Part No. Go Member	Part No. NoGo Member	Price	Part No. Go/NoGo Set	Price	Gage length Go (Min)	Gage length NoGo (Min)	Pitch Diameters Go	Pitch Diameters NoGo	Handle No.
1 1/16-16 UN										
Taperlock Plug 2B	**301167010**	**301167020**	$141.00	**301167040**	$299.25	1"	5/8"	1.0219	1.0284	4
Taperlock Plug 3B	**301167010**	**301167030**	$141.00	**301167050**	$299.25	1"	5/8"	1.0219	1.0268	4
Ring 2A	**361167010**	**361167030**	$335.00	**361167050**	$670.00	11/16"	11/16"	1.0204	1.0154	5T
Ring 3A	**361167020**	**361167040**	$335.00	**361167060**	$670.00	11/16"	11/16"	1.0219	1.0182	5T
Set Plug 2A	**371167010**	**371167030**	$205.00	**371167050**	$427.25	1-1/2"	1-1/2"	1.0204	1.0154	4
Set Plug 3A	**371167020**	**371167040**	$205.00	**371167060**	$427.25	1-1/2"	1-1/2"	1.0219	1.0182	4
1 1/16-18 UNEF										
Taperlock Plug 2B	**301167510**	**301167520**	$119.00	**301167540**	$255.25	1"	5/8"	1.0264	1.0326	4
Taperlock Plug 3B	**301167510**	**301167530**	$119.00	**301167550**	$255.25	1"	5/8"	1.0264	1.0310	4
Ring 2A	**361167510**	**361167530**	$301.00	**361167550**	$602.00	11/16"	11/16"	1.0250	1.0203	5T
Ring 3A	**361167520**	**361167540**	$301.00	**361167560**	$602.00	11/16"	11/16"	1.0264	1.0228	5T
Set Plug 2A	**371167510**	**371167530**	$215.00	**371167550**	$447.25	1-1/2"	1-1/2"	1.0250	1.0203	4
Set Plug 3A	**371167520**	**371167540**	$215.00	**371167560**	$447.25	1-1/2"	1-1/2"	1.0264	1.0228	4
1 1/16-20 UN										
Taperlock Plug 2B	**301168010**	**301168020**	$151.00	**301168040**	$319.25	1"	5/8"	1.0300	1.0359	4
Taperlock Plug 3B	**301168010**	**301168030**	$151.00	**301168050**	$319.25	1"	5/8"	1.0300	1.0344	4
Ring 2A	**361168010**	**361168030**	$359.00	**361168050**	$718.00	11/16"	11/16"	1.0286	1.0241	5T
Ring 3A	**361168020**	**361168040**	$359.00	**361168060**	$718.00	11/16"	11/16"	1.0300	1.0266	5T
Set Plug 2A	**371168010**	**371168030**	$215.00	**371168050**	$447.25	1-1/2"	1-1/2"	1.0286	1.0241	4
Set Plug 3A	**371168020**	**371168040**	$215.00	**371168060**	$447.25	1-1/2"	1-1/2"	1.0300	1.0266	4
1 1/16-28 UN										
Taperlock Plug 2B	**301168510**	**301168520**	$178.00	**301168540**	$373.25	1"	5/8"	1.0393	1.0445	4
Taperlock Plug 3B	**301168510**	**301168530**	$178.00	**301168550**	$373.25	1"	5/8"	1.0393	1.0432	4
Ring 2A	**361168510**	**361168530**	$476.00	**361168550**	$952.00	11/16"	11/16"	1.0381	1.0341	5T
Ring 3A	**361168520**	**361168540**	$476.00	**361168560**	$952.00	11/16"	11/16"	1.0393	1.0363	5T
Set Plug 2A	**371168510**	**371168530**	$255.00	**371168550**	$527.25	1-1/2"	1-1/2"	1.0381	1.0341	4
Set Plug 3A	**371168520**	**371168540**	$255.00	**371168560**	$527.25	1-1/2"	1-1/2"	1.0393	1.0363	4
1 1/8-7 UNC										
Taperlock Plug 2B	**301169010**	**301169020**	$101.00	**301169040**	$219.25	1"	5/8"	1.0322	1.0416	4
Taperlock Plug 3B	**301169010**	**301169030**	$101.00	**301169050**	$219.25	1"	5/8"	1.0322	1.0393	4
Ring 2A	**361169010**	**361169030**	$299.00	**361169050**	$598.00	15/16"	11/16"	1.0300	1.0228	5T
Ring 3A	**361169020**	**361169040**	$299.00	**361169060**	$598.00	15/16"	11/16"	1.0322	1.0268	5T
Set Plug 2A	**371169010**	**371169030**	$198.00	**371169050**	$413.25	2-1/8"	1-1/2"	1.0300	1.0228	4
Set Plug 3A	**371169020**	**371169040**	$198.00	**371169060**	$413.25	2-1/8"	1-1/2"	1.0322	1.0268	4
1 1/8-8 UN										
Taperlock Plug 2B	**301169510**	**301169520**	$141.00	**301169540**	$299.25	1"	5/8"	1.0438	1.0528	4
Taperlock Plug 3B	**301169510**	**301169530**	$141.00	**301169550**	$299.25	1"	5/8"	1.0438	1.0505	4
Ring 2A	**361169510**	**361169530**	$335.00	**361169550**	$670.00	15/16"	11/16"	1.0417	1.0348	5T
Ring 3A	**361169520**	**361169540**	$335.00	**361169560**	$670.00	15/16"	11/16"	1.0438	1.0386	5T
Set Plug 2A	**371169510**	**371169530**	$205.00	**371169550**	$427.25	2-1/8"	1-1/2"	1.0417	1.0348	4
Set Plug 3A	**371169520**	**371169540**	$205.00	**371169560**	$427.25	2-1/8"	1-1/2"	1.0438	1.0386	4
1 1/8-12 UNF										
Taperlock Plug 2B	**301170010**	**301170020**	$101.00	**301170040**	$219.25	1"	5/8"	1.0709	1.0787	4
Taperlock Plug 3B	**301170010**	**301170030**	$101.00	**301170050**	$219.25	1"	5/8"	1.0709	1.0768	4
Ring 2A	**361170010**	**361170030**	$299.00	**361170050**	$598.00	11/16"	11/16"	1.0691	1.0631	5T
Ring 3A	**361170020**	**361170040**	$299.00	**361170060**	$598.00	11/16"	11/16"	1.0709	1.0664	5T
Set Plug 2A	**371170010**	**371170030**	$199.00	**371170050**	$415.25	1-1/2"	1-1/2"	1.0691	1.0631	4
Set Plug 3A	**371170020**	**371170040**	$199.00	**371170060**	$415.25	1-1/2"	1-1/2"	1.0709	1.0664	4
1 1/8-16 UN										
Taperlock Plug 2B	**301170510**	**301170520**	$141.00	**301170540**	$299.25	1"	5/8"	1.0844	1.0909	4
Taperlock Plug 3B	**301170510**	**301170530**	$141.00	**301170550**	$299.25	1"	5/8"	1.0844	1.0893	4
Ring 2A	**361170510**	**361170530**	$335.00	**361170550**	$670.00	11/16"	11/16"	1.0829	1.0779	5T
Ring 3A	**361170520**	**361170540**	$335.00	**361170560**	$670.00	11/16"	11/16"	1.0844	1.0807	5T
Set Plug 2A	**371170510**	**371170530**	$205.00	**371170550**	$427.25	1-1/2"	1-1/2"	1.0829	1.0779	4
Set Plug 3A	**371170520**	**371170540**	$205.00	**371170560**	$427.25	1-1/2"	1-1/2"	1.0844	1.0807	4

Standard Thread Gages

INCH	Part No. Go Member	Part No. NoGo Member	Price	Part No. Go/NoGo Set	Price	Gage length Go (Min)	Gage length NoGo (Min)	Pitch Diameters Go	Pitch Diameters NoGo	Handle No.
1 1/8-18 UNEF										
Taperlock Plug 2B	**301171010**	**301171020**	$124.00	**301171040**	$265.25	1"	5/8"	1.0889	1.0951	4
Taperlock Plug 3B	**301171010**	**301171030**	$124.00	**301171050**	$265.25	1"	5/8"	1.0889	1.0935	4
Ring 2A	**361171010**	**361171030**	$315.00	**361171050**	$630.00	11/16"	11/16"	1.0875	1.0828	5T
Ring 3A	**361171020**	**361171040**	$315.00	**361171060**	$630.00	11/16"	11/16"	1.0889	1.0853	5T
Set Plug 2A	**371171010**	**371171030**	$215.00	**371171050**	$447.25	1-1/2"	1-1/2"	1.0875	1.0828	4
Set Plug 3A	**371171020**	**371171040**	$215.00	**371171060**	$447.25	1-1/2"	1-1/2"	1.0889	1.0853	4
1 1/8-20 UN										
Taperlock Plug 2B	**301171310**	**301171320**	$151.00	**301171340**	$319.25	1"	5/8"	1.0925	1.0984	4
Taperlock Plug 3B	**301171310**	**301171330**	$151.00	**301171350**	$319.25	1"	5/8"	1.0925	1.0969	4
Ring 2A	**361171310**	**361171330**	$355.00	**361171350**	$710.00	11/16"	11/16"	1.0911	1.0866	5T
Ring 3A	**361171320**	**361171340**	$355.00	**361171360**	$710.00	11/16"	11/16"	1.0925	1.0891	5T
Set Plug 2A	**371171310**	**371171330**	$215.00	**371171350**	$447.25	1-1/2"	1-1/2"	1.0911	1.0866	4
Set Plug 3A	**371171320**	**371171340**	$215.00	**371171360**	$447.25	1-1/2"	1-1/2"	1.0925	1.0891	4
1 1/8-28 UN										
Taperlock Plug 2B	**301171510**	**301171520**	$178.00	**301171540**	$373.25	1"	5/8"	1.1018	1.1070	4
Taperlock Plug 3B	**301171510**	**301171530**	$178.00	**301171550**	$373.25	1"	5/8"	1.1018	1.1057	4
Ring 2A	**361171510**	**361171530**	$475.00	**361171550**	$950.00	11/16"	11/16"	1.1006	1.0966	5T
Ring 3A	**361171520**	**361171540**	$475.00	**361171560**	$950.00	11/16"	11/16"	1.1018	1.0988	5T
Set Plug 2A	**371171510**	**371171530**	$255.00	**371171550**	$527.25	1-1/2"	1-1/2"	1.1006	1.0966	4
Set Plug 3A	**371171520**	**371171540**	$255.00	**371171560**	$527.25	1-1/2"	1-1/2"	1.1018	1.0988	4
1 3/16-8 UN										
Taperlock Plug 2B	**301172010**	**301172020**	$141.00	**301172040**	$300.50	1-1/4"	3/4"	1.1063	1.1154	5
Taperlock Plug 3B	**301172010**	**301172030**	$141.00	**301172050**	$300.50	1-1/4"	3/4"	1.1063	1.1131	5
Ring 2A	**361172010**	**361172030**	$359.00	**361172050**	$718.00	1-1/8"	3/4"	1.1042	1.0972	6T
Ring 3A	**361172020**	**361172040**	$359.00	**361172060**	$718.00	1-1/8"	3/4"	1.1063	1.1011	6T
Set Plug 2A	**371172010**	**371172030**	$205.00	**371172050**	$428.50	2-3/8"	1-5/8"	1.1042	1.0972	5
Set Plug 3A	**371172020**	**371172040**	$205.00	**371172060**	$428.50	2-3/8"	1-5/8"	1.1063	1.1011	5
1 3/16-12 UN										
Taperlock Plug 2B	**301172510**	**301172520**	$141.00	**301172540**	$300.50	1"	3/4"	1.1334	1.1409	5
Taperlock Plug 3B	**301172510**	**301172530**	$141.00	**301172550**	$300.50	1"	3/4"	1.1334	1.1390	5
Ring 2A	**361172510**	**361172530**	$359.00	**361172550**	$718.00	3/4"	3/4"	1.1317	1.1259	6T
Ring 3A	**361172520**	**361172540**	$359.00	**361172560**	$718.00	3/4"	3/4"	1.1334	1.1291	6T
Set Plug 2A	**371172510**	**371172530**	$206.00	**371172550**	$430.50	1-5/8"	1-5/8"	1.1317	1.1259	5
Set Plug 3A	**371172520**	**371172540**	$206.00	**371172560**	$430.50	1-5/8"	1-5/8"	1.1334	1.1291	5
1 3/16-16 UN										
Taperlock Plug 2B	**301173010**	**301173020**	$141.00	**301173040**	$300.50	1"	3/4"	1.1469	1.1535	5
Taperlock Plug 3B	**301173010**	**301173030**	$141.00	**301173050**	$300.50	1"	3/4"	1.1469	1.1519	5
Ring 2A	**361173010**	**361173030**	$359.00	**361173050**	$718.00	3/4"	3/4"	1.1454	1.1403	6T
Ring 3A	**361173020**	**361173040**	$359.00	**361173060**	$718.00	3/4"	3/4"	1.1469	1.1431	6T
Set Plug 2A	**371173010**	**371173030**	$205.00	**371173050**	$428.50	1-5/8"	1-5/8"	1.1454	1.1403	5
Set Plug 3A	**371173020**	**371173040**	$205.00	**371173060**	$428.50	1-5/8"	1-5/8"	1.1469	1.1431	5
1 3/16-18 UNEF										
Taperlock Plug 2B	**301173510**	**301173520**	$124.00	**301173540**	$266.50	1"	3/4"	1.1514	1.1577	5
Taperlock Plug 3B	**301173510**	**301173530**	$124.00	**301173550**	$266.50	1"	3/4"	1.1514	1.1561	5
Ring 2A	**361173510**	**361173530**	$317.00	**361173550**	$634.00	3/4"	3/4"	1.1499	1.1450	6T
Ring 3A	**361173520**	**361173540**	$317.00	**361173560**	$634.00	3/4"	3/4"	1.1514	1.1478	6T
Set Plug 2A	**371173510**	**371173530**	$215.00	**371173550**	$448.50	1-5/8"	1-5/8"	1.1499	1.1450	5
Set Plug 3A	**371173520**	**371173540**	$215.00	**371173560**	$448.50	1-5/8"	1-5/8"	1.1514	1.1478	5
1 3/16-20 UN										
Taperlock Plug 2B	**301174010**	**301174020**	$151.00	**301174040**	$320.50	1"	3/4"	1.1550	1.1611	5
Taperlock Plug 3B	**301174010**	**301174030**	$151.00	**301174050**	$320.50	1"	3/4"	1.1550	1.1595	5
Ring 2A	**361174010**	**361174030**	$364.00	**361174050**	$728.00	3/4"	3/4"	1.1536	1.1489	6T
Ring 3A	**361174020**	**361174040**	$364.00	**361174060**	$728.00	3/4"	3/4"	1.1550	1.1515	6T
Set Plug 2A	**371174010**	**371174030**	$215.00	**371174050**	$448.50	1-5/8"	1-5/8"	1.1536	1.1489	5
Set Plug 3A	**371174020**	**371174040**	$215.00	**371174060**	$448.50	1-5/8"	1-5/8"	1.1550	1.1515	5

Standard Thread Gages

INCH	Part No. Go Member	Part No. NoGo Member	Price	Part No. Go/NoGo Set	Price	Gage length Go (Min)	Gage length NoGo (Min)	Pitch Diameters Go	Pitch Diameters NoGo	Handle No.
1 3/16-28 UN										
Taperlock Plug 2B	**301174510**	**301174520**	$184.00	**301174540**	$386.50	1"	3/4"	1.1643	1.1696	5
Taperlock Plug 3B	**301174510**	**301174530**	$184.00	**301174550**	$386.50	1"	3/4"	1.1643	1.1683	5
Ring 2A	**361174510**	**361174530**	$495.00	**361174550**	$990.00	3/4"	3/4"	1.1631	1.1590	6T
Ring 3A	**361174520**	**361174540**	$495.00	**361174560**	$990.00	3/4"	3/4"	1.1643	1.1612	6T
Set Plug 2A	**371174510**	**371174530**	$266.00	**371174550**	$550.50	1-5/8"	1-5/8"	1.1631	1.1590	5
Set Plug 3A	**371174520**	**371174540**	$266.00	**371174560**	$550.50	1-5/8"	1-5/8"	1.1643	1.1612	5
1 1/4-7 UNC										
Taperlock Plug 2B	**301175010**	**301175020**	$106.00	**301175040**	$230.50	1-1/4"	3/4"	1.1572	1.1668	5
Taperlock Plug 3B	**301175010**	**301175030**	$106.00	**301175050**	$230.50	1-1/4"	3/4"	1.1572	1.1644	5
Ring 2A	**361175010**	**361175030**	$328.00	**361175050**	$656.00	1-1/8"	3/4"	1.1550	1.1476	6T
Ring 3A	**361175020**	**361175040**	$328.00	**361175060**	$656.00	1-1/8"	3/4"	1.1572	1.1517	6T
Set Plug 2A	**371175010**	**371175030**	$198.00	**371175050**	$414.50	2-3/8"	1-5/8"	1.1550	1.1476	5
Set Plug 3A	**371175020**	**371175040**	$198.00	**371175060**	$414.50	2-3/8"	1-5/8"	1.1572	1.1517	5
1 1/4-8 UN										
Taperlock Plug 2B	**301175510**	**301175520**	$141.00	**301175540**	$300.50	1-1/4"	3/4"	1.1688	1.1780	5
Taperlock Plug 3B	**301175510**	**301175530**	$141.00	**301175550**	$300.50	1-1/4"	3/4"	1.1688	1.1757	5
Ring 2A	**361175510**	**361175530**	$359.00	**361175550**	$718.00	1-1/8"	3/4"	1.1667	1.1597	6T
Ring 3A	**361175520**	**361175540**	$359.00	**361175560**	$718.00	1-1/8"	3/4"	1.1688	1.1635	6T
Set Plug 2A	**371175510**	**371175530**	$205.00	**371175550**	$428.50	2-3/8"	1-5/8"	1.1667	1.1597	5
Set Plug 3A	**371175520**	**371175540**	$205.00	**371175560**	$428.50	2-3/8"	1-5/8"	1.1688	1.1635	5
1 1/4-12 UNF										
Taperlock Plug 2B	**301176010**	**301176020**	$106.00	**301176040**	$230.50	1"	3/4"	1.1959	1.2039	5
Taperlock Plug 3B	**301176010**	**301176030**	$106.00	**301176050**	$230.50	1"	3/4"	1.1959	1.2019	5
Ring 2A	**361176010**	**361176030**	$328.00	**361176050**	$656.00	3/4"	3/4"	1.1941	1.1879	6T
Ring 3A	**361176020**	**361176040**	$328.00	**361176060**	$656.00	3/4"	3/4"	1.1959	1.1913	6T
Set Plug 2A	**371176010**	**371176030**	$198.00	**371176050**	$414.50	1-5/8"	1-5/8"	1.1941	1.1879	5
Set Plug 3A	**371176020**	**371176040**	$198.00	**371176060**	$414.50	1-5/8"	1-5/8"	1.1959	1.1913	5
1 1/4-16 UN										
Taperlock Plug 2B	**301176510**	**301176520**	$141.00	**301176540**	$300.50	1"	3/4"	1.2094	1.2160	5
Taperlock Plug 3B	**301176510**	**301176530**	$141.00	**301176550**	$300.50	1"	3/4"	1.2094	1.2144	5
Ring 2A	**361176510**	**361176530**	$359.00	**361176550**	$718.00	3/4"	3/4"	1.2079	1.2028	6T
Ring 3A	**361176520**	**361176540**	$359.00	**361176560**	$718.00	3/4"	3/4"	1.2094	1.2056	6T
Set Plug 2A	**371176510**	**371176530**	$205.00	**371176550**	$428.50	1-5/8"	1-5/8"	1.2079	1.2028	5
Set Plug 3A	**371176520**	**371176540**	$205.00	**371176560**	$428.50	1-5/8"	1-5/8"	1.2094	1.2056	5
1 1/4-18 UNEF										
Taperlock Plug 2B	**301177010**	**301177020**	$128.00	**301177040**	$274.50	1"	3/4"	1.2139	1.2202	5
Taperlock Plug 3B	**301177010**	**301177030**	$128.00	**301177050**	$274.50	1"	3/4"	1.2139	1.2186	5
Ring 2A	**361177010**	**361177030**	$334.00	**361177050**	$668.00	3/4"	3/4"	1.2124	1.2075	6T
Ring 3A	**361177020**	**361177040**	$334.00	**361177060**	$668.00	3/4"	3/4"	1.2139	1.2103	6T
Set Plug 2A	**371177010**	**371177030**	$215.00	**371177050**	$448.50	1-5/8"	1-5/8"	1.2124	1.2075	5
Set Plug 3A	**371177020**	**371177040**	$215.00	**371177060**	$448.50	1-5/8"	1-5/8"	1.2139	1.2103	5
1 1/4-20 UN										
Taperlock Plug 2B	**301177310**	**301177320**	$151.00	**301177340**	$320.50	1"	3/4"	1.2175	1.2236	5
Taperlock Plug 3B	**301177310**	**301177330**	$151.00	**301177350**	$320.50	1"	3/4"	1.2175	1.2220	5
Ring 2A	**361177310**	**361177330**	$364.00	**361177350**	$728.00	3/4"	3/4"	1.2161	1.2114	6T
Ring 3A	**361177320**	**361177340**	$364.00	**361177360**	$728.00	3/4"	3/4"	1.2175	1.2140	6T
Set Plug 2A	**371177310**	**371177330**	$218.00	**371177350**	$454.50	1-5/8"	1-5/8"	1.2161	1.2114	5
Set Plug 3A	**371177320**	**371177340**	$218.00	**371177360**	$454.50	1-5/8"	1-5/8"	1.2175	1.2140	5
1 1/4-28 UN										
Taperlock Plug 2B	**301177510**	**301177520**	$184.00	**301177540**	$386.50	1"	3/4"	1.2268	1.2321	5
Taperlock Plug 3B	**301177510**	**301177530**	$184.00	**301177550**	$386.50	1"	3/4"	1.2268	1.2308	5
Ring 2A	**361177510**	**361177530**	$495.00	**361177550**	$990.00	3/4"	3/4"	1.2256	1.2215	6T
Ring 3A	**361177520**	**361177540**	$495.00	**361177560**	$990.00	3/4"	3/4"	1.2268	1.2237	6T
Set Plug 2A	**371177510**	**371177530**	$266.00	**371177550**	$550.50	1-5/8"	1-5/8"	1.2256	1.2215	5
Set Plug 3A	**371177520**	**371177540**	$266.00	**371177560**	$550.50	1-5/8"	1-5/8"	1.2268	1.2237	5

Standard Thread Gages

INCH	Part No. Go Member	Part No. NoGo Member	Price	Part No. Go/NoGo Set	Price	Gage length Go (Min)	Gage length NoGo (Min)	Pitch Diameters Go	Pitch Diameters NoGo	Handle No.
1 5/16-8 UN										
Taperlock Plug 2B	**301178010**	**301178020**	$148.00	**301178040**	$314.50	1"	3/4"	1.2313	1.2405	5
Taperlock Plug 3B	**301178010**	**301178030**	$148.00	**301178050**	$314.50	1"	3/4"	1.2313	1.2382	5
Ring 2A	**361178010**	**361178030**	$360.00	**361178050**	$720.00	3/4"	3/4"	1.2292	1.2221	6T
Ring 3A	**361178020**	**361178040**	$360.00	**361178060**	$720.00	3/4"	3/4"	1.2313	1.2260	6T
Set Plug 2A	**371178010**	**371178030**	$216.00	**371178050**	$450.50	1-5/8"	1-5/8"	1.2292	1.2221	5
Set Plug 3A	**371178020**	**371178040**	$216.00	**371178060**	$450.50	1-5/8"	1-5/8"	1.2313	1.2260	5
1 5/16-12 UN										
Taperlock Plug 2B	**301178510**	**301178520**	$148.00	**301178540**	$314.50	1"	3/4"	1.2584	1.2659	5
Taperlock Plug 3B	**301178510**	**301178530**	$148.00	**301178550**	$314.50	1"	3/4"	1.2584	1.2640	5
Ring 2A	**361178510**	**361178530**	$360.00	**361178550**	$720.00	3/4"	3/4"	1.2567	1.2509	6T
Ring 3A	**361178520**	**361178540**	$360.00	**361178560**	$720.00	3/4"	3/4"	1.2584	1.2541	6T
Set Plug 2A	**371178510**	**371178530**	$216.00	**371178550**	$450.50	1-5/8"	1-5/8"	1.2567	1.2509	5
Set Plug 3A	**371178520**	**371178540**	$216.00	**371178560**	$450.50	1-5/8"	1-5/8"	1.2584	1.2541	5
1 5/16-16 UN										
Taperlock Plug 2B	**301179010**	**301179020**	$148.00	**301179040**	$314.50	1"	3/4"	1.2719	1.2785	5
Taperlock Plug 3B	**301179010**	**301179030**	$148.00	**301179050**	$314.50	1"	3/4"	1.2719	1.2769	5
Ring 2A	**361179010**	**361179030**	$360.00	**361179050**	$720.00	3/4"	3/4"	1.2704	1.2653	6T
Ring 3A	**361179020**	**361179040**	$360.00	**361179060**	$720.00	3/4"	3/4"	1.2719	1.2681	6T
Set Plug 2A	**371179010**	**371179030**	$216.00	**371179050**	$450.50	1-5/8"	1-5/8"	1.2704	1.2653	5
Set Plug 3A	**371179020**	**371179040**	$216.00	**371179060**	$450.50	1-5/8"	1-5/8"	1.2719	1.2681	5
1 5/16-18 UNEF										
Taperlock Plug 2B	**301179510**	**301179520**	$145.00	**301179540**	$308.50	1"	3/4"	1.2764	1.2827	5
Taperlock Plug 3B	**301179510**	**301179530**	$145.00	**301179550**	$308.50	1"	3/4"	1.2764	1.2811	5
Ring 2A	**361179510**	**361179530**	$341.00	**361179550**	$682.00	3/4"	3/4"	1.2749	1.2700	6T
Ring 3A	**361179520**	**361179540**	$341.00	**361179560**	$682.00	3/4"	3/4"	1.2764	1.2728	6T
Set Plug 2A	**371179510**	**371179530**	$228.00	**371179550**	$474.50	1-5/8"	1-5/8"	1.2749	1.2700	5
Set Plug 3A	**371179520**	**371179540**	$228.00	**371179560**	$474.50	1-5/8"	1-5/8"	1.2764	1.2728	5
1 5/16-20 UN										
Taperlock Plug 2B	**301180010**	**301180020**	$158.00	**301180040**	$334.50	1"	3/4"	1.2800	1.2861	5
Taperlock Plug 3B	**301180010**	**301180030**	$158.00	**301180050**	$334.50	1"	3/4"	1.2800	1.2845	5
Ring 2A	**361180010**	**361180030**	$375.00	**361180050**	$750.00	3/4"	3/4"	1.2786	1.2739	6T
Ring 3A	**361180020**	**361180040**	$375.00	**361180060**	$750.00	3/4"	3/4"	1.2800	1.2765	6T
Set Plug 2A	**371180010**	**371180030**	$239.00	**371180050**	$496.50	1-5/8"	1-5/8"	1.2786	1.2739	5
Set Plug 3A	**371180020**	**371180040**	$239.00	**371180060**	$496.50	1-5/8"	1-5/8"	1.2800	1.2765	5
1 5/16-28 UN										
Taperlock Plug 2B	**301180510**	**301180520**	$193.00	**301180540**	$404.50	1"	3/4"	1.2893	1.2946	5
Taperlock Plug 3B	**301180510**	**301180530**	$193.00	**301180550**	$404.50	1"	3/4"	1.2893	1.2933	5
Ring 2A	**361180510**	**361180530**	$509.00	**361180550**	$1,018.00	3/4"	3/4"	1.2881	1.2840	6T
Ring 3A	**361180520**	**361180540**	$509.00	**361180560**	$1,018.00	3/4"	3/4"	1.2893	1.2862	6T
Set Plug 2A	**371180510**	**371180530**	$282.00	**371180550**	$582.50	1-5/8"	1-5/8"	1.2881	1.2840	5
Set Plug 3A	**371180520**	**371180540**	$282.00	**371180560**	$582.50	1-5/8"	1-5/8"	1.2893	1.2862	5
1 3/8-6 UNC										
Taperlock Plug 2B	**301181010**	**301181020**	$116.00	**301181040**	$250.50	1-1/4"	3/4"	1.2667	1.2771	5
Taperlock Plug 3B	**301181010**	**301181030**	$116.00	**301181050**	$250.50	1-1/4"	3/4"	1.2667	1.2745	5
Ring 2A	**361181010**	**361181030**	$341.00	**361181050**	$682.00	1-1/8"	3/4"	1.2643	1.2563	6T
Ring 3A	**361181020**	**361181040**	$341.00	**361181060**	$682.00	1-1/8"	3/4"	1.2667	1.2607	6T
Set Plug 2A	**371181010**	**371181030**	$230.00	**371181050**	$478.50	2-3/8"	1-5/8"	1.2643	1.2563	5
Set Plug 3A	**371181020**	**371181040**	$230.00	**371181060**	$478.50	2-3/8"	1-5/8"	1.2667	1.2607	5
1 3/8-8 UN										
Taperlock Plug 2B	**301181510**	**301181520**	$148.00	**301181540**	$314.50	1-1/4"	3/4"	1.2938	1.3031	5
Taperlock Plug 3B	**301181510**	**301181530**	$148.00	**301181550**	$314.50	1-1/4"	3/4"	1.2938	1.3008	5
Ring 2A	**361181510**	**361181530**	$360.00	**361181550**	$720.00	1-1/8"	3/4"	1.2916	1.2844	6T
Ring 3A	**361181520**	**361181540**	$360.00	**361181560**	$720.00	1-1/8"	3/4"	1.2938	1.2884	6T
Set Plug 2A	**371181510**	**371181530**	$217.00	**371181550**	$452.50	2-3/8"	1-5/8"	1.2916	1.2844	5
Set Plug 3A	**371181520**	**371181540**	$217.00	**371181560**	$452.50	2-3/8"	1-5/8"	1.2938	1.2884	5

Standard Thread Gages

INCH	Part No. Go Member	Part No. NoGo Member	Price	Part No. Go/NoGo Set	Price	Gage length Go (Min)	Gage length NoGo (Min)	Pitch Diameters Go	Pitch Diameters NoGo	Handle No.
1 3/8-12 UNF										
Taperlock Plug 2B	**301182010**	**301182020**	$116.00	**301182040**	$250.50	1"	3/4"	1.3209	1.3291	5
Taperlock Plug 3B	**301182010**	**301182030**	$116.00	**301182050**	$250.50	1"	3/4"	1.3209	1.3270	5
Ring 2A	**361182010**	**361182030**	$341.00	**361182050**	$682.00	3/4"	3/4"	1.3190	1.3127	6T
Ring 3A	**361182020**	**361182040**	$341.00	**361182060**	$682.00	3/4"	3/4"	1.3209	1.3162	6T
Set Plug 2A	**371182010**	**371182030**	$230.00	**371182050**	$478.50	1-5/8"	1-5/8"	1.3190	1.3127	5
Set Plug 3A	**371182020**	**371182040**	$230.00	**371182060**	$478.50	1-5/8"	1-5/8"	1.3209	1.3162	5
1 3/8-16 UN										
Taperlock Plug 2B	**301182510**	**301182520**	$148.00	**301182540**	$314.50	1"	3/4"	1.3344	1.3410	5
Taperlock Plug 3B	**301182510**	**301182530**	$148.00	**301182550**	$314.50	1"	3/4"	1.3344	1.3394	5
Ring 2A	**361182510**	**361182530**	$360.00	**361182550**	$720.00	3/4"	3/4"	1.3329	1.3278	6T
Ring 3A	**361182520**	**361182540**	$360.00	**361182560**	$720.00	3/4"	3/4"	1.3344	1.3306	6T
Set Plug 2A	**371182510**	**371182530**	$216.00	**371182550**	$450.50	1-5/8"	1-5/8"	1.3329	1.3278	5
Set Plug 3A	**371182520**	**371182540**	$216.00	**371182560**	$450.50	1-5/8"	1-5/8"	1.3344	1.3306	5
1 3/8-18 UNEF										
Taperlock Plug 2B	**301183010**	**301183020**	$151.00	**301183040**	$320.50	1"	3/4"	1.3389	1.3452	5
Taperlock Plug 3B	**301183010**	**301183030**	$151.00	**301183050**	$320.50	1"	3/4"	1.3389	1.3436	5
Ring 2A	**361183010**	**361183030**	$365.00	**361183050**	$730.00	3/4"	3/4"	1.3374	1.3325	6T
Ring 3A	**361183020**	**361183040**	$365.00	**361183060**	$730.00	3/4"	3/4"	1.3389	1.3353	6T
Set Plug 2A	**371183010**	**371183030**	$239.00	**371183050**	$496.50	1-5/8"	1-5/8"	1.3374	1.3325	5
Set Plug 3A	**371183020**	**371183040**	$239.00	**371183060**	$496.50	1-5/8"	1-5/8"	1.3389	1.3353	5
1 3/8-20 UN										
Taperlock Plug 2B	**301183310**	**301183320**	$157.00	**301183340**	$332.50	1"	3/4"	1.3425	1.3486	5
Taperlock Plug 3B	**301183310**	**301183330**	$157.00	**301183350**	$332.50	1"	3/4"	1.3425	1.3470	5
Ring 2A	**361183310**	**361183330**	$375.00	**361183350**	$750.00	3/4"	3/4"	1.3411	1.3364	6T
Ring 3A	**361183320**	**361183340**	$375.00	**361183360**	$750.00	3/4"	3/4"	1.3425	1.3390	6T
Set Plug 2A	**371183310**	**371183330**	$245.00	**371183350**	$508.50	1-5/8"	1-5/8"	1.3411	1.3364	5
Set Plug 3A	**371183320**	**371183340**	$245.00	**371183360**	$508.50	1-5/8"	1-5/8"	1.3425	1.3390	5
1 3/8-28 UN										
Taperlock Plug 2B	**301183510**	**301183520**	$205.00	**301183540**	$428.50	1"	3/4"	1.3518	1.3571	5
Taperlock Plug 3B	**301183510**	**301183530**	$205.00	**301183550**	$428.50	1"	3/4"	1.3518	1.3558	5
Ring 2A	**361183510**	**361183530**	$509.00	**361183550**	$1,018.00	3/4"	3/4"	1.3506	1.3465	6T
Ring 3A	**361183520**	**361183540**	$509.00	**361183560**	$1,018.00	3/4"	3/4"	1.3518	1.3487	6T
Set Plug 2A	**371183510**	**371183530**	$280.00	**371183550**	$578.50	1-5/8"	1-5/8"	1.3506	1.3465	5
Set Plug 3A	**371183520**	**371183540**	$280.00	**371183560**	$578.50	1-5/8"	1-5/8"	1.3518	1.3487	5
1 7/16-6 UN										
Taperlock Plug 2B	**301184010**	**301184020**	$192.00	**301184040**	$402.50	1-1/4"	3/4"	1.3292	1.3396	5
Taperlock Plug 3B	**301184010**	**301184030**	$192.00	**301184050**	$402.50	1-1/4"	3/4"	1.3292	1.3370	5
Ring 2A	**361184010**	**361184030**	$450.00	**361184050**	$900.00	1-1/8"	3/4"	1.3268	1.3188	6T
Ring 3A	**361184020**	**361184040**	$450.00	**361184060**	$900.00	1-1/8"	3/4"	1.3292	1.3232	6T
Set Plug 2A	**371184010**	**371184030**	$278.00	**371184050**	$574.50	2-3/8"	1-5/8"	1.3268	1.3188	5
Set Plug 3A	**371184020**	**371184040**	$278.00	**371184060**	$574.50	2-3/8"	1-5/8"	1.3292	1.3232	5
1 7/16-8 UN										
Taperlock Plug 2B	**301184310**	**301184320**	$169.00	**301184340**	$356.50	1-1/4"	3/4"	1.3563	1.3657	5
Taperlock Plug 3B	**301184310**	**301184330**	$169.00	**301184350**	$356.50	1-1/4"	3/4"	1.3563	1.3634	5
Ring 2A	**361184310**	**361184330**	$387.00	**361184350**	$774.00	1-1/8"	3/4"	1.3541	1.3469	6T
Ring 3A	**361184320**	**361184340**	$387.00	**361184360**	$774.00	1-1/8"	3/4"	1.3563	1.3509	6T
Set Plug 2A	**371184310**	**371184330**	$244.00	**371184350**	$506.50	2-3/8"	1-5/8"	1.3541	1.3469	5
Set Plug 3A	**371184320**	**371184340**	$244.00	**371184360**	$506.50	2-3/8"	1-5/8"	1.3563	1.3509	5
1 7/16-12 UN										
Taperlock Plug 2B	**301184510**	**301184520**	$169.00	**301184540**	$356.50	1"	3/4"	1.3834	1.3910	5
Taperlock Plug 3B	**301184510**	**301184530**	$169.00	**301184550**	$356.50	1"	3/4"	1.3834	1.3891	5
Ring 2A	**361184510**	**361184530**	$387.00	**361184550**	$774.00	3/4"	3/4"	1.3816	1.3757	6T
Ring 3A	**361184520**	**361184540**	$387.00	**361184560**	$774.00	3/4"	3/4"	1.3834	1.3790	6T
Set Plug 2A	**371184510**	**371184530**	$244.00	**371184550**	$506.50	1-5/8"	1-5/8"	1.3816	1.3757	5
Set Plug 3A	**371184520**	**371184540**	$244.00	**371184560**	$506.50	1-5/8"	1-5/8"	1.3834	1.3790	5

Standard Thread Gages

INCH	Part No. Go Member	Part No. NoGo Member	Price	Part No. Go/NoGo Set	Price	Gage length Go (Min)	Gage length NoGo (Min)	Pitch Diameters Go	Pitch Diameters NoGo	Handle No.
1 7/16-16 UN										
Taperlock Plug 2B	**301185010**	**301185020**	$169.00	**301185040**	$356.50	1"	3/4"	1.3969	1.4037	5
Taperlock Plug 3B	**301185010**	**301185030**	$169.00	**301185050**	$356.50	1"	3/4"	1.3969	1.4020	5
Ring 2A	**361185010**	**361185030**	$387.00	**361185050**	$774.00	3/4"	3/4"	1.3953	1.3901	6T
Ring 3A	**361185020**	**361185040**	$387.00	**361185060**	$774.00	3/4"	3/4"	1.3969	1.3930	6T
Set Plug 2A	**371185010**	**371185030**	$244.00	**371185050**	$506.50	1-5/8"	1-5/8"	1.3953	1.3901	5
Set Plug 3A	**371185020**	**371185040**	$244.00	**371185060**	$506.50	1-5/8"	1-5/8"	1.3969	1.3930	5
1 7/16-18 UNEF										
Taperlock Plug 2B	**301185510**	**301185520**	$157.00	**301185540**	$332.50	1"	3/4"	1.4014	1.4079	5
Taperlock Plug 3B	**301185510**	**301185530**	$157.00	**301185550**	$332.50	1"	3/4"	1.4014	1.4062	5
Ring 2A	**361185510**	**361185530**	$373.00	**361185550**	$746.00	3/4"	3/4"	1.3999	1.3949	6T
Ring 3A	**361185520**	**361185540**	$373.00	**361185560**	$746.00	3/4"	3/4"	1.4014	1.3977	6T
Set Plug 2A	**371185510**	**371185530**	$254.00	**371185550**	$526.50	1-5/8"	1-5/8"	1.3999	1.3949	5
Set Plug 3A	**371185520**	**371185540**	$254.00	**371185560**	$526.50	1-5/8"	1-5/8"	1.4014	1.3977	5
1 7/16-20 UN										
Taperlock Plug 2B	**301186010**	**301186020**	$178.00	**301186040**	$374.50	1"	3/4"	1.4050	1.4112	5
Taperlock Plug 3B	**301186010**	**301186030**	$178.00	**301186050**	$374.50	1"	3/4"	1.4050	1.4096	5
Ring 2A	**361186010**	**361186030**	$401.00	**361186050**	$802.00	3/4"	3/4"	1.4036	1.3988	6T
Ring 3A	**361186020**	**361186040**	$401.00	**361186060**	$802.00	3/4"	3/4"	1.4050	1.4014	6T
Set Plug 2A	**371186010**	**371186030**	$256.00	**371186050**	$530.50	1-5/8"	1-5/8"	1.4036	1.3988	5
Set Plug 3A	**371186020**	**371186040**	$256.00	**371186060**	$530.50	1-5/8"	1-5/8"	1.4050	1.4014	5
1 7/16-28 UN										
Taperlock Plug 2B	**301186510**	**301186520**	$231.00	**301186540**	$480.50	1"	3/4"	1.4143	1.4198	5
Taperlock Plug 3B	**301186510**	**301186530**	$231.00	**301186550**	$480.50	1"	3/4"	1.4143	1.4184	5
Ring 2A	**361186510**	**361186530**	$529.00	**361186550**	$1,058.00	3/4"	3/4"	1.4130	1.4088	6T
Ring 3A	**361186520**	**361186540**	$529.00	**361186560**	$1,058.00	3/4"	3/4"	1.4143	1.4112	6T
Set Plug 2A	**371186510**	**371186530**	$326.00	**371186550**	$670.50	1-5/8"	1-5/8"	1.4130	1.4088	5
Set Plug 3A	**371186520**	**371186540**	$326.00	**371186560**	$670.50	1-5/8"	1-5/8"	1.4143	1.4112	5
1 1/2-6 UNC										
Taperlock Plug 2B	**301187010**	**301187020**	$135.00	**301187040**	$288.50	1-1/4"	3/4"	1.3917	1.4022	5
Taperlock Plug 3B	**301187010**	**301187030**	$135.00	**301187050**	$288.50	1-1/4"	3/4"	1.3917	1.3996	5
Ring 2A	**361187010**	**361187030**	$373.00	**361187050**	$746.00	1-1/8"	3/4"	1.3893	1.3812	6T
Ring 3A	**361187020**	**361187040**	$373.00	**361187060**	$746.00	1-1/8"	3/4"	1.3917	1.3856	6T
Set Plug 2A	**371187010**	**371187030**	$241.00	**371187050**	$500.50	2-3/8"	1-5/8"	1.3893	1.3812	5
Set Plug 3A	**371187020**	**371187040**	$241.00	**371187060**	$500.50	2-3/8"	1-5/8"	1.3917	1.3856	5
1 1/2-8 UN										
Taperlock Plug 2B	**301187510**	**301187520**	$169.00	**301187540**	$356.50	1-1/4"	3/4"	1.4188	1.4283	5
Taperlock Plug 3B	**301187510**	**301187530**	$169.00	**301187550**	$356.50	1-1/4"	3/4"	1.4188	1.4259	5
Ring 2A	**361187510**	**361187530**	$387.00	**361187550**	$774.00	1-1/8"	3/4"	1.4166	1.4093	6T
Ring 3A	**361187520**	**361187540**	$387.00	**361187560**	$774.00	1-1/8"	3/4"	1.4188	1.4133	6T
Set Plug 2A	**371187510**	**371187530**	$244.00	**371187550**	$506.50	2-3/8"	1-5/8"	1.4166	1.4093	5
Set Plug 3A	**371187520**	**371187540**	$244.00	**371187560**	$506.50	2-3/8"	1-5/8"	1.4188	1.4133	5
1 1/2-12 UNF										
Taperlock Plug 2B	**301188010**	**301188020**	$135.00	**301188040**	$288.50	1"	3/4"	1.4459	1.4542	5
Taperlock Plug 3B	**301188010**	**301188030**	$135.00	**301188050**	$288.50	1"	3/4"	1.4459	1.4522	5
Ring 2A	**361188010**	**361188030**	$373.00	**361188050**	$746.00	3/4"	3/4"	1.4440	1.4376	6T
Ring 3A	**361188020**	**361188040**	$373.00	**361188060**	$746.00	3/4"	3/4"	1.4459	1.4411	6T
Set Plug 2A	**371188010**	**371188030**	$241.00	**371188050**	$500.50	1-5/8"	1-5/8"	1.4440	1.4376	5
Set Plug 3A	**371188020**	**371188040**	$241.00	**371188060**	$500.50	1-5/8"	1-5/8"	1.4459	1.4411	5
1 1/2-16 UN										
Taperlock Plug 2B	**301188510**	**301188520**	$170.00	**301188540**	$358.50	1"	3/4"	1.4594	1.4662	5
Taperlock Plug 3B	**301188510**	**301188530**	$170.00	**301188550**	$358.50	1"	3/4"	1.4594	1.4645	5
Ring 2A	**361188510**	**361188530**	$387.00	**361188550**	$774.00	3/4"	3/4"	1.4578	1.4526	6T
Ring 3A	**361188520**	**361188540**	$387.00	**361188560**	$774.00	3/4"	3/4"	1.4594	1.4555	6T
Set Plug 2A	**371188510**	**371188530**	$244.00	**371188550**	$506.50	1-5/8"	1-5/8"	1.4578	1.4526	5
Set Plug 3A	**371188520**	**371188540**	$244.00	**371188560**	$506.50	1-5/8"	1-5/8"	1.4594	1.4555	5

Standard Thread Gages

INCH	Part No. Go Member	Part No. NoGo Member	Price	Part No. Go/NoGo Set	Price	Gage length Go (Min)	Gage length NoGo (Min)	Pitch Diameters Go	Pitch Diameters NoGo	Handle No.
1 1/2-18 UNEF										
Taperlock Plug 2B	**301189010**	**301189020**	$162.00	**301189040**	$342.50	1"	3/4"	1.4639	1.4704	5
Taperlock Plug 3B	**301189010**	**301189030**	$162.00	**301189050**	$342.50	1"	3/4"	1.4639	1.4687	5
Ring 2A	**361189010**	**361189030**	$390.00	**361189050**	$780.00	3/4"	3/4"	1.4624	1.4574	6T
Ring 3A	**361189020**	**361189040**	$390.00	**361189060**	$780.00	3/4"	3/4"	1.4639	1.4602	6T
Set Plug 2A	**371189010**	**371189030**	$254.00	**371189050**	$526.50	1-5/8"	1-5/8"	1.4624	1.4574	5
Set Plug 3A	**371189020**	**371189040**	$254.00	**371189060**	$526.50	1-5/8"	1-5/8"	1.4639	1.4602	5
1 1/2-20 UN										
Taperlock Plug 2B	**301189510**	**301189520**	$178.00	**301189540**	$374.50	1"	3/4"	1.4675	1.4737	5
Taperlock Plug 3B	**301189510**	**301189530**	$178.00	**301189550**	$374.50	1"	3/4"	1.4675	1.4721	5
Ring 2A	**361189510**	**361189530**	$401.00	**361189550**	$802.00	3/4"	3/4"	1.4661	1.4613	6T
Ring 3A	**361189520**	**361189540**	$401.00	**361189560**	$802.00	3/4"	3/4"	1.4675	1.4639	6T
Set Plug 2A	**371189510**	**371189530**	$256.00	**371189550**	$530.50	1-5/8"	1-5/8"	1.4661	1.4613	5
Set Plug 3A	**371189520**	**371189540**	$256.00	**371189560**	$530.50	1-5/8"	1-5/8"	1.4675	1.4639	5
1 1/2-28 UN										
Taperlock Plug 2B	**301190010**	**301190020**	$231.00	**301190040**	$480.50	1"	3/4"	1.4768	1.4823	5
Taperlock Plug 3B	**301190010**	**301190030**	$231.00	**301190050**	$480.50	1"	3/4"	1.4768	1.4809	5
Ring 2A	**361190010**	**361190030**	$529.00	**361190050**	$1,058.00	3/4"	3/4"	1.4755	1.4713	6T
Ring 3A	**361190020**	**361190040**	$529.00	**361190060**	$1,058.00	3/4"	3/4"	1.4768	1.4737	6T
Set Plug 2A	**371190010**	**371190030**	$326.00	**371190050**	$670.50	1-5/8"	1-5/8"	1.4755	1.4713	5
Set Plug 3A	**371190020**	**371190040**	$326.00	**371190060**	$670.50	1-5/8"	1-5/8"	1.4768	1.4737	5
1 5/8-8 UN										
Trilock Plug 2B	**301190310**	**301190320**	$215.00	**301190340**	$455.50	1-1/4"	7/8"	1.5438	1.5535	5 1/2
Trilock Plug 3B	**301190310**	**301190330**	$215.00	**301190350**	$455.50	1-1/4"	7/8"	1.5438	1.5510	5 1/2
Ring 2A	**361190310**	**361190330**	$403.00	**361190350**	$806.00	1-1/4"	13/16"	1.5416	1.5342	
Ring 3A	**361190320**	**361190340**	$403.00	**361190360**	$806.00	1-1/4"	13/16"	1.5438	1.5382	
Set Plug 2A	**371190310**	**371190330**	$305.00	**371190350**	$635.50	2-7/8"	1-7/8"	1.5416	1.5342	5 1/2
Set Plug 3A	**371190320**	**371190340**	$305.00	**371190360**	$635.50	2-7/8"	1-7/8"	1.5438	1.5382	5 1/2
1 5/8-12 UN										
Trilock Plug 2B	**301190510**	**301190520**	$215.00	**301190540**	$455.50	1-1/4"	7/8"	1.5709	1.5785	5 1/2
Trilock Plug 3B	**301190510**	**301190530**	$215.00	**301190550**	$455.50	1-1/4"	7/8"	1.5709	1.5766	5 1/2
Ring 2A	**361190510**	**361190530**	$403.00	**361190550**	$806.00	13/16"	13/16"	1.5691	1.5632	
Ring 3A	**361190520**	**361190540**	$403.00	**361190560**	$806.00	13/16"	13/16"	1.5709	1.5665	
Set Plug 2A	**371190510**	**371190530**	$305.00	**371190550**	$635.50	1-7/8"	1-7/8"	1.5691	1.5632	5 1/2
Set Plug 3A	**371190520**	**371190540**	$305.00	**371190560**	$635.50	1-7/8"	1-7/8"	1.5709	1.5665	5 1/2
1 3/4-8 UN										
Trilock Plug 2B	**301190810**	**301190820**	$231.00	**301190840**	$487.50	1-1/4"	7/8"	1.6688	1.6786	5 1/2
Trilock Plug 3B	**301190810**	**301190830**	$231.00	**301190850**	$487.50	1-1/4"	7/8"	1.6688	1.6762	5 1/2
Ring 2A	**361190810**	**361190830**	$439.00	**361190850**	$878.00	1-1/4"	13/16"	1.6665	1.6590	
Ring 3A	**361190820**	**361190840**	$439.00	**361190860**	$878.00	1-1/4"	13/16"	1.6688	1.6631	
Set Plug 2A	**371190810**	**371190830**	$324.00	**371190850**	$673.50	2-7/8"	1-7/8"	1.6665	1.6590	5 1/2
Set Plug 3A	**371190820**	**371190840**	$324.00	**371190860**	$673.50	2-7/8"	1-7/8"	1.6688	1.6631	5 1/2
1 3/4-12 UN										
Trilock Plug 2B	**301191010**	**301191020**	$231.00	**301191040**	$487.50	1-1/4"	7/8"	1.6959	1.7037	5 1/2
Trilock Plug 3B	**301191010**	**301191030**	$231.00	**301191050**	$487.50	1-1/4"	7/8"	1.6959	1.7017	5 1/2
Ring 2A	**361191010**	**361191030**	$440.00	**361191050**	$880.00	13/16"	13/16"	1.6941	1.6881	
Ring 3A	**361191020**	**361191040**	$440.00	**361191060**	$880.00	13/16"	13/16"	1.6959	1.6914	
Set Plug 2A	**371191010**	**371191030**	$324.00	**371191050**	$673.50	1-7/8"	1-7/8"	1.6941	1.6881	5 1/2
Set Plug 3A	**371191020**	**371191040**	$324.00	**371191060**	$673.50	1-7/8"	1-7/8"	1.6959	1.6914	5 1/2
1 7/8-8 UN										
Trilock Plug 2B	**301191310**	**301191320**	$234.00	**301191340**	$493.50	1-1/4"	7/8"	1.7938	1.8038	5 1/2
Trilock Plug 3B	**301191310**	**301191330**	$234.00	**301191350**	$493.50	1-1/4"	7/8"	1.7938	1.8013	5 1/2
Ring 2A	**361191310**	**361191330**	$450.00	**361191350**	$900.00	1-1/4"	13/16"	1.7915	1.7838	
Ring 3A	**361191320**	**361191340**	$450.00	**361191360**	$900.00	1-1/4"	13/16"	1.7938	1.7881	
Set Plug 2A	**371191310**	**371191330**	$331.00	**371191350**	$687.50	2-7/8"	1-7/8"	1.7915	1.7838	5 1/2
Set Plug 3A	**371191320**	**371191340**	$331.00	**371191360**	$687.50	2-7/8"	1-7/8"	1.7938	1.7881	5 1/2

Standard Thread Gages

INCH	Part No. Go Member	Part No. NoGo Member	Price	Part No. Go/NoGo Set	Price	Gage length Go (Min)	Gage length NoGo (Min)	Pitch Diameters Go	Pitch Diameters NoGo	Handle No.
1 7/8-12 UN										
Trilock Plug 2B	**301191510**	**301191520**	$234.00	**301191540**	$493.50	1-1/4"	7/8"	1.8209	1.8287	5 1/2
Trilock Plug 3B	**301191510**	**301191530**	$234.00	**301191550**	$493.50	1-1/4"	7/8"	1.8209	1.8267	5 1/2
Ring 2A	**361191510**	**361191530**	$450.00	**361191550**	$900.00	13/16"	13/16"	1.8191	1.8131	
Ring 3A	**361191520**	**361191540**	$450.00	**361191560**	$900.00	13/16"	13/16"	1.8209	1.8164	
Set Plug 2A	**371191510**	**371191530**	$331.00	**371191550**	$687.50	1-7/8"	1-7/8"	1.8191	1.8131	5 1/2
Set Plug 3A	**371191520**	**371191540**	$331.00	**371191560**	$687.50	1-7/8"	1-7/8"	1.8209	1.8164	5 1/2
2-8 UN										
Trilock Plug 2B	**301191810**	**301191820**	$245.00	**301191840**	$515.50	1-1/4"	7/8"	1.9188	1.9289	5 1/2
Trilock Plug 3B	**301191810**	**301191830**	$245.00	**301191850**	$515.50	1-1/4"	7/8"	1.9188	1.9264	5 1/2
Ring 2A	**361191810**	**361191830**	$461.00	**361191850**	$922.00	1-1/4"	13/16"	1.9165	1.9087	
Ring 3A	**361191820**	**361191840**	$461.00	**361191860**	$922.00	1-1/4"	13/16"	1.9188	1.9130	
Set Plug 2A	**371191810**	**371191830**	$349.00	**371191850**	$723.50	2-7/8"	1-7/8"	1.9165	1.9087	5 1/2
Set Plug 3A	**371191820**	**371191840**	$349.00	**371191860**	$723.50	2-7/8"	1-7/8"	1.9188	1.9130	5 1/2
2-12 UN										
Trilock Plug 2B	**301192010**	**301192020**	$245.00	**301192040**	$515.50	1-1/4"	7/8"	1.9459	1.9538	5 1/2
Trilock Plug 3B	**301192010**	**301192030**	$245.00	**301192050**	$515.50	1-1/4"	7/8"	1.9459	1.9518	5 1/2
Ring 2A	**361192010**	**361192030**	$461.00	**361192050**	$922.00	13/16"	13/16"	1.9441	1.9380	
Ring 3A	**361192020**	**361192040**	$461.00	**361192060**	$922.00	13/16"	13/16"	1.9459	1.9414	
Set Plug 2A	**371192010**	**371192030**	$349.00	**371192050**	$723.50	1-7/8"	2"	1.9441	1.9380	5 1/2
Set Plug 3A	**371192020**	**371192040**	$349.00	**371192060**	$723.50	1-7/8"	2"	1.9459	1.9414	5 1/2
2 1/8-8 UN										
Trilock Plug 2B	**301192210**	**301192220**	$256.00	**301192240**	$540.00	1-3/8"	7/8"	2.0438	2.0540	6
Trilock Plug 3B	**301192210**	**301192230**	$256.00	**301192250**	$540.00	1-3/8"	7/8"	2.0438	2.0515	6
Ring 2A	**361192210**	**361192230**	$495.00	**361192250**	$990.00	1-5/16"	7/8"	2.0414	2.0335	
Ring 3A	**361192220**	**361192240**	$495.00	**361192260**	$990.00	1-5/16"	7/8"	2.0438	2.0379	
Set Plug 2A	**371192210**	**371192230**	$362.00	**371192250**	$752.00	3"	2"	2.0414	2.0335	6
Set Plug 3A	**371192220**	**371192240**	$362.00	**371192260**	$752.00	3"	2"	2.0438	2.0379	6
2 1/4-8 UN										
Trilock Plug 2B	**301192310**	**301192320**	$256.00	**301192340**	$540.00	1-3/8"	7/8"	2.1688	2.1792	6
Trilock Plug 3B	**301192310**	**301192330**	$256.00	**301192350**	$540.00	1-3/8"	7/8"	2.1688	2.1766	6
Ring 2A	**361192310**	**361192330**	$495.00	**361192350**	$990.00	1-5/16"	7/8"	2.1664	2.1584	
Ring 3A	**361192320**	**361192340**	$495.00	**361192360**	$990.00	1-5/16"	7/8"	2.1688	2.1628	
Set Plug 2A	**371192310**	**371192330**	$362.00	**371192350**	$752.00	2"	2"	2.1664	2.1584	6
Set Plug 3A	**371192320**	**371192340**	$362.00	**371192360**	$752.00	2"	2"	2.1688	2.1628	6
2 1/4-12 UN										
Trilock Plug 2B	**301192510**	**301192520**	$256.00	**301192540**	$540.00	1-3/8"	7/8"	2.1959	2.2038	6
Trilock Plug 3B	**301192510**	**301192530**	$256.00	**301192550**	$540.00	1-3/8"	7/8"	2.1959	2.2018	6
Ring 2A	**361192510**	**361192530**	$495.00	**361192550**	$990.00	7/8"	7/8"	2.1941	2.1880	
Ring 3A	**361192520**	**361192540**	$495.00	**361192560**	$990.00	7/8"	7/8"	2.1959	2.1914	
Set Plug 2A	**371192510**	**371192530**	$362.00	**371192550**	$752.00	3"	2"	2.1941	2.1880	6
Set Plug 3A	**371192520**	**371192540**	$362.00	**371192560**	$752.00	3"	2"	2.1959	2.1914	6
2 3/8-8 UN										
Trilock Plug 2B	**301192410**	**301192420**	$266.00	**301192440**	$560.00	1-3/8"	7/8"	2.2938	2.3043	6
Trilock Plug 3B	**301192410**	**301192430**	$266.00	**301192450**	$560.00	1-3/8"	7/8"	2.2938	2.3017	6
Ring 2A	**361192410**	**361192430**	$520.00	**361192450**	$1,040.00	1-5/16"	7/8"	2.2914	2.2833	
Ring 3A	**361192420**	**361192440**	$520.00	**361192460**	$1,040.00	1-5/16"	7/8"	2.2938	2.2878	
Set Plug 2A	**371192410**	**371192430**	$375.00	**371192450**	$778.00	3"	2"	2.2914	2.2833	6
Set Plug 3A	**371192420**	**371192440**	$375.00	**371192460**	$778.00	3"	2"	2.2938	2.2878	6
2 1/2-8 UN										
Trilock Plug 2B	**301192810**	**301192820**	$266.00	**301192840**	$560.00	1-3/8"	7/8"	2.4188	2.4294	6
Trilock Plug 3B	**301192810**	**301192830**	$266.00	**301192850**	$560.00	1-3/8"	7/8"	2.4188	2.4268	6
Ring 2A	**361192810**	**361192830**	$520.00	**361192850**	$1,040.00	1-5/16"	7/8"	2.4164	2.4082	
Ring 3A	**361192820**	**361192840**	$520.00	**361192860**	$1,040.00	1-5/16"	7/8"	2.4188	2.4127	
Set Plug 2A	**371192810**	**371192830**	$375.00	**371192850**	$778.00	3"	2"	2.4164	2.4082	6
Set Plug 3A	**371192820**	**371192840**	$375.00	**371192860**	$778.00	3"	2"	2.4188	2.4127	6

Standard Thread Gages

INCH	Part No. Go Member	Part No. NoGo Member	Price	Part No. Go/NoGo Set	Price	Gage length Go (Min)	Gage length NoGo (Min)	Pitch Diameters Go	Pitch Diameters NoGo	Handle No.
2 1/2-12 UN										
Trilock Plug 2B	**301193010**	**301193020**	$266.00	**301193040**	$560.00	1-3/8"	7/8"	2.4459	2.4540	6
Trilock Plug 3B	**301193010**	**301193030**	$266.00	**301193050**	$560.00	1-3/8"	7/8"	2.4459	2.4519	6
Ring 2A	**361193010**	**361193030**	$520.00	**361193050**	$1,040.00	7/8"	7/8"	2.4440	2.4378	
Ring 3A	**361193020**	**361193040**	$520.00	**361193060**	$1,040.00	7/8"	7/8"	2.4459	2.4413	
Set Plug 2A	**371193010**	**371193030**	$375.00	**371193050**	$778.00	2"	2"	2.4440	2.4378	6
Set Plug 3A	**371193020**	**371193040**	$375.00	**371193060**	$778.00	2"	2"	2.4459	2.4413	6
2 5/8-8 UN										
Trilock Plug 2B	**301193510**	**301193520**	$278.00	**301193540**	$588.00	1-1/2"	1"	2.5438	2.5545	7
Trilock Plug 3B	**301193510**	**301193530**	$278.00	**301193550**	$588.00	1-1/2"	1"	2.5438	2.5518	7
Ring 2A	**361193510**	**361193530**	$563.00	**361193550**	$1,126.00	1-3/8"	7/8"	2.5413	2.5331	
Ring 3A	**361193520**	**361193540**	$563.00	**361193560**	$1,126.00	1-3/8"	7/8"	2.5438	2.5376	
Set Plug 2A	**371193510**	**371193530**	$395.00	**371193550**	$822.00	3-1/8"	2"	2.5413	2.5331	7
Set Plug 3A	**371193520**	**371193540**	$395.00	**371193560**	$822.00	3-1/8"	2"	2.5438	2.5376	7
2 3/4-8 UN										
Trilock Plug 2B	**301194010**	**301194020**	$278.00	**301194040**	$588.00	1-1/2"	1"	2.6688	2.6796	7
Trilock Plug 3B	**301194010**	**301194030**	$278.00	**301194050**	$588.00	1-1/2"	1"	2.6688	2.6769	7
Ring 2A	**361194010**	**361194030**	$563.00	**361194050**	$1,126.00	1-3/8"	7/8"	2.6663	2.6580	
Ring 3A	**361194020**	**361194040**	$563.00	**361194060**	$1,126.00	1-3/8"	7/8"	2.6688	2.6625	
Set Plug 2A	**371194010**	**371194030**	$395.00	**371194050**	$822.00	3-1/8"	2"	2.6663	2.6580	7
Set Plug 3A	**371194020**	**371194040**	$395.00	**371194060**	$822.00	3-1/8"	2"	2.6688	2.6625	7
2 7/8-8 UN										
Trilock Plug 2B	**301195010**	**301195020**	$286.00	**301195040**	$604.00	1-1/2"	1"	2.7938	2.8048	7
Trilock Plug 3B	**301195010**	**301195030**	$286.00	**301195050**	$604.00	1-1/2"	1"	2.7938	2.8020	7
Ring 2A	**361195010**	**361195030**	$610.00	**361195050**	$1,220.00	1-3/8"	7/8"	2.7913	2.7829	
Ring 3A	**361195020**	**361195040**	$610.00	**361195060**	$1,220.00	1-3/8"	7/8"	2.7938	2.7875	
Set Plug 2A	**371195010**	**371195030**	$401.00	**371195050**	$834.00	3-1/8"	2"	2.7913	2.7829	7
Set Plug 3A	**371195020**	**371195040**	$401.00	**371195060**	$834.00	3-1/8"	2"	2.7938	2.7875	7
3-8 UN										
Trilock Plug 2B	**301196010**	**301196020**	$286.00	**301196040**	$604.00	1-1/2"	1"	2.9188	2.9299	7
Trilock Plug 3B	**301196010**	**301196030**	$286.00	**301196050**	$604.00	1-1/2"	1"	2.9188	2.9271	7
Ring 2A	**361196010**	**361196030**	$612.00	**361196050**	$1,224.00	1-3/8"	7/8"	2.9162	2.9077	
Ring 3A	**361196020**	**361196040**	$612.00	**361196060**	$1,224.00	1-3/8"	7/8"	2.9188	2.9124	
Set Plug 2A	**371196010**	**371196030**	$401.00	**371196050**	$834.00	3-1/8"	2"	2.9162	2.9077	7
Set Plug 3A	**371196020**	**371196040**	$401.00	**371196060**	$834.00	3-1/8"	2"	2.9188	2.9124	7
3 1/4-8 UN										
Trilock Plug 2B	**301197010**	**301197020**	$300.00	**301197040**	$658.00	1-1/2"	1"	3.1688	3.1801	2 x 7SE
Trilock Plug 3B	**301197010**	**301197030**	$300.00	**301197050**	$658.00	1-1/2"	1"	3.1688	3.1773	2 x 7SE
Ring 2A	**361197010**	**361197030**	$656.00	**361197050**	$1,312.00	1-7/16"	15/16"	3.1662	3.1575	
Ring 3A	**361197020**	**361197040**	$656.00	**361197060**	$1,312.00	1-7/16"	15/16"	3.1688	3.1623	
Set Plug 2A	**371197010**	**371197030**	$425.00	**371197050**	$908.00	3-1/8"	2"	3.1662	3.1575	2 x 7SE
Set Plug 3A	**371197020**	**371197040**	$425.00	**371197060**	$908.00	3-1/8"	2"	3.1688	3.1623	2 x 7SE

Standard Left Hand Thread Gages

INCH	Part No. Go Member	Part No. NoGo Member	Price	Part No. Go/NoGo Set	Price	Gage length Go (Min)	Gage length NoGo (Min)	Pitch Diameters Go	Pitch Diameters NoGo	Handle No.
2-56 UNC LH										
Taperlock Plug 2B	**301505010**	**301505020**	$148.00	**301505040**	$313.25	1/4"	3/16"	0.0744	0.0772	000
Taperlock Plug 3B	**301505010**	**301505030**	$148.00	**301505050**	$313.25	1/4"	3/16"	0.0744	0.0765	000
Ring 2A	**361505010**	**361505030**	$374.00	**361505050**	$748.00	3/32"	3/32"	0.0738	0.0717	1T
Ring 3A	**361505020**	**361505040**	$374.00	**361505060**	$748.00	3/32"	3/32"	0.0744	0.0728	1T
Set Plug 2A	**371505010**	**371505030**	$215.00	**371505050**	$447.25	7/32"	7/32"	0.0738	0.0717	000
Set Plug 3A	**371505020**	**371505040**	$215.00	**371505060**	$447.25	7/32"	7/32"	0.0744	0.0728	000
2-64 UNF LH										
Taperlock Plug 2B	**301506010**	**301506020**	$148.00	**301506040**	$313.25	1/4"	3/16"	0.0759	0.0786	000
Taperlock Plug 3B	**301506010**	**301506030**	$148.00	**301506050**	$313.25	1/4"	3/16"	0.0759	0.0779	000
Ring 2A	**361506010**	**361506030**	$374.00	**361506050**	$748.00	3/32"	3/32"	0.0753	0.0733	1T
Ring 3A	**361506020**	**361506040**	$374.00	**361506060**	$748.00	3/32"	3/32"	0.0759	0.0744	1T
Set Plug 2A	**371506010**	**371506030**	$215.00	**371506050**	$447.25	7/32"	7/32"	0.0753	0.0733	000
Set Plug 3A	**371506020**	**371506040**	$215.00	**371506060**	$447.25	7/32"	7/32"	0.0759	0.0744	000
3-48 UNC LH										
Taperlock Plug 2B	**301507510**	**301507520**	$140.00	**301507540**	$297.25	1/4"	3/16"	0.0855	0.0885	000
Taperlock Plug 3B	**301507510**	**301507530**	$140.00	**301507550**	$297.25	1/4"	3/16"	0.0855	0.0877	000
Ring 2A	**361507510**	**361507530**	$367.00	**361507550**	$734.00	5/32"	5/32"	0.0848	0.0825	1T
Ring 3A	**361507520**	**361507540**	$367.00	**361507560**	$734.00	5/32"	5/32"	0.0855	0.0838	1T
Set Plug 2A	**371507510**	**371507530**	$206.00	**371507550**	$429.25	3/8"	3/8"	0.0848	0.0825	000
Set Plug 3A	**371507520**	**371507540**	$206.00	**371507560**	$429.25	3/8"	3/8"	0.0855	0.0838	000
3-56 UNF LH										
Taperlock Plug 2B	**301508510**	**301508520**	$153.00	**301508540**	$323.25	1/4"	3/16"	0.0874	0.0902	000
Taperlock Plug 3B	**301508510**	**301508530**	$153.00	**301508550**	$323.25	1/4"	3/16"	0.0874	0.0895	000
Ring 2A	**361508510**	**361508530**	$409.00	**361508550**	$818.00	5/32"	5/32"	0.0867	0.0845	1T
Ring 3A	**361508520**	**361508540**	$409.00	**361508560**	$818.00	5/32"	5/32"	0.0874	0.0858	1T
Set Plug 2A	**371508510**	**371508530**	$224.00	**371508550**	$465.25	3/8"	3/8"	0.0867	0.0845	000
Set Plug 3A	**371508520**	**371508540**	$224.00	**371508560**	$465.25	3/8"	3/8"	0.0874	0.0858	000
4-40 UNC LH										
Taperlock Plug 2B	**301510010**	**301510020**	$135.00	**301510040**	$286.00	5/16"	7/32"	0.0958	0.0991	00
Taperlock Plug 3B	**301510010**	**301510030**	$135.00	**301510050**	$286.00	5/16"	7/32"	0.0958	0.0982	00
Ring 2A	**361510010**	**361510030**	$367.00	**361510050**	$734.00	5/32"	5/32"	0.0950	0.0925	1T
Ring 3A	**361510020**	**361510040**	$367.00	**361510060**	$734.00	5/32"	5/32"	0.0958	0.0939	1T
Set Plug 2A	**371510010**	**371510030**	$196.00	**371510050**	$408.00	3/8"	3/8"	0.0950	0.0925	00
Set Plug 3A	**371510020**	**371510040**	$196.00	**371510060**	$408.00	3/8"	3/8"	0.0958	0.0939	00
4-48 UNF LH										
Taperlock Plug 2B	**301511010**	**301511020**	$135.00	**301511040**	$286.00	5/16"	7/32"	0.0985	0.1016	00
Taperlock Plug 3B	**301511010**	**301511030**	$135.00	**301511050**	$286.00	5/16"	7/32"	0.0985	0.1008	00
Ring 2A	**361511010**	**361511030**	$367.00	**361511050**	$734.00	5/32"	5/32"	0.0978	0.0954	1T
Ring 3A	**361511020**	**361511040**	$367.00	**361511060**	$734.00	5/32"	5/32"	0.0985	0.0967	1T
Set Plug 2A	**371511010**	**371511030**	$191.00	**371511050**	$398.00	3/8"	3/8"	0.0978	0.0954	00
Set Plug 3A	**371511020**	**371511040**	$191.00	**371511060**	$398.00	3/8"	3/8"	0.0985	0.0967	00
5-40 UNC LH										
Taperlock Plug 2B	**301512510**	**301512520**	$125.00	**301512540**	$266.00	5/16"	7/32"	0.1088	0.1121	00
Taperlock Plug 3B	**301512510**	**301512530**	$125.00	**301512550**	$266.00	5/16"	7/32"	0.1088	0.1113	00
Ring 2A	**361512510**	**361512530**	$317.00	**361512550**	$634.00	5/32"	5/32"	0.1080	0.1054	1T
Ring 3A	**361512520**	**361512540**	$317.00	**361512560**	$634.00	5/32"	5/32"	0.1088	0.1069	1T
Set Plug 2A	**371512510**	**371512530**	$178.00	**371512550**	$372.00	3/8"	3/8"	0.1080	0.1054	00
Set Plug 3A	**371512520**	**371512540**	$178.00	**371512560**	$372.00	3/8"	3/8"	0.1088	0.1069	00
5-44 UNF LH										
Taperlock Plug 2B	**301513510**	**301513520**	$131.00	**301513540**	$278.00	5/16"	7/32"	0.1102	0.1134	00
Taperlock Plug 3B	**301513510**	**301513530**	$131.00	**301513550**	$278.00	5/16"	7/32"	0.1102	0.1126	00
Ring 2A	**361513510**	**361513530**	$374.00	**361513550**	$748.00	5/32"	5/32"	0.1095	0.1070	1T
Ring 3A	**361513520**	**361513540**	$374.00	**361513560**	$748.00	5/32"	5/32"	0.1102	0.1083	1T
Set Plug 2A	**371513510**	**371513530**	$184.00	**371513550**	$384.00	3/8"	3/8"	0.1095	0.1070	00
Set Plug 3A	**371513520**	**371513540**	$184.00	**371513560**	$384.00	3/8"	3/8"	0.1102	0.1083	00

"J" Series threads availible upon request

Standard Left Hand Thread Gages

INCH	Part No. Go Member	Part No. NoGo Member	Price	Part No. Go/NoGo Set	Price	Gage length Go (Min)	Gage length NoGo (Min)	Pitch Diameters Go	Pitch Diameters NoGo	Handle No.
6-32 UNC LH										
Taperlock Plug 2B	**301515010**	**301515020**	$110.00	**301515040**	$236.00	5/16"	7/32"	0.1177	0.1214	00
Taperlock Plug 3B	**301515010**	**301515030**	$110.00	**301515050**	$236.00	5/16"	7/32"	0.1177	0.1204	00
Ring 2A	**361515010**	**361515030**	$317.00	**361515050**	$634.00	5/32"	5/32"	0.1169	0.1141	1T
Ring 3A	**361515020**	**361515040**	$317.00	**361515060**	$634.00	5/32"	5/32"	0.1177	0.1156	1T
Set Plug 2A	**371515010**	**371515030**	$159.00	**371515050**	$334.00	3/8"	3/8"	0.1169	0.1141	00
Set Plug 3A	**371515020**	**371515040**	$159.00	**371515060**	$334.00	3/8"	3/8"	0.1177	0.1156	00
6-40 UNF LH										
Taperlock Plug 2B	**301516010**	**301516020**	$125.00	**301516040**	$266.00	5/16"	7/32"	0.1218	0.1252	00
Taperlock Plug 3B	**301516010**	**301516030**	$125.00	**301516050**	$266.00	5/16"	7/32"	0.1218	0.1243	00
Ring 2A	**361516010**	**361516030**	$326.00	**361516050**	$652.00	5/32"	5/32"	0.1210	0.1184	1T
Ring 3A	**361516020**	**361516040**	$326.00	**361516060**	$652.00	5/32"	5/32"	0.1218	0.1198	1T
Set Plug 2A	**371516010**	**371516030**	$178.00	**371516050**	$372.00	3/8"	3/8"	0.1210	0.1184	00
Set Plug 3A	**371516020**	**371516040**	$178.00	**371516060**	$372.00	3/8"	3/8"	0.1218	0.1198	00
8-32 UNC LH										
Taperlock Plug 2B	**301517510**	**301517520**	$110.00	**301517540**	$236.00	13/32"	9/32"	0.1437	0.1475	0
Taperlock Plug 3B	**301517510**	**301517530**	$110.00	**301517550**	$236.00	13/32"	9/32"	0.1437	0.1465	0
Ring 2A	**361517510**	**361517530**	$301.00	**361517550**	$602.00	3/16"	3/16"	0.1428	0.1399	1T
Ring 3A	**361517520**	**361517540**	$301.00	**361517560**	$602.00	3/16"	3/16"	0.1437	0.1415	1T
Set Plug 2A	**371517510**	**371517530**	$159.00	**371517550**	$334.00	13/32"	13/32"	0.1428	0.1399	0
Set Plug 3A	**371517520**	**371517540**	$159.00	**371517560**	$334.00	13/32"	13/32"	0.1437	0.1415	0
8-36 UNF LH										
Taperlock Plug 2B	**301518510**	**301518520**	$125.00	**301518540**	$266.00	13/32"	9/32"	0.1460	0.1496	0
Taperlock Plug 3B	**301518510**	**301518530**	$125.00	**301518550**	$266.00	13/32"	9/32"	0.1460	0.1487	0
Ring 2A	**361518510**	**361518530**	$326.00	**361518550**	$652.00	3/16"	3/16"	0.1452	0.1424	1T
Ring 3A	**361518520**	**361518540**	$326.00	**361518560**	$652.00	3/16"	3/16"	0.1460	0.1439	1T
Set Plug 2A	**371518510**	**371518530**	$178.00	**371518550**	$372.00	13/32"	13/32"	0.1452	0.1424	0
Set Plug 3A	**371518520**	**371518540**	$178.00	**371518560**	$372.00	13/32"	13/32"	0.1460	0.1439	0
10-24 UNC LH										
Taperlock Plug 2B	**301520010**	**301520020**	$110.00	**301520040**	$236.00	13/32"	9/32"	0.1629	0.1672	0
Taperlock Plug 3B	**301520010**	**301520030**	$110.00	**301520050**	$236.00	13/32"	9/32"	0.1629	0.1661	0
Ring 2A	**361520010**	**361520030**	$301.00	**361520050**	$602.00	3/16"	3/16"	0.1619	0.1586	1T
Ring 3A	**361520020**	**361520040**	$301.00	**361520060**	$602.00	3/16"	3/16"	0.1629	0.1604	1T
Set Plug 2A	**371520010**	**371520030**	$159.00	**371520050**	$334.00	13/32"	13/32"	0.1619	0.1586	0
Set Plug 3A	**371520020**	**371520040**	$159.00	**371520060**	$334.00	13/32"	13/32"	0.1629	0.1604	0
10-32 UNF LH										
Taperlock Plug 2B	**301521010**	**301521020**	$110.00	**301521040**	$236.00	13/32"	9/32"	0.1697	0.1736	0
Taperlock Plug 3B	**301521010**	**301521030**	$110.00	**301521050**	$236.00	13/32"	9/32"	0.1697	0.1726	0
Ring 2A	**361521010**	**361521030**	$301.00	**361521050**	$602.00	3/16"	3/16"	0.1688	0.1658	1T
Ring 3A	**361521020**	**361521040**	$301.00	**361521060**	$602.00	3/16"	3/16"	0.1697	0.1674	1T
Set Plug 2A	**371521010**	**371521030**	$159.00	**371521050**	$334.00	13/32"	13/32"	0.1688	0.1658	0
Set Plug 3A	**371521020**	**371521040**	$159.00	**371521060**	$334.00	13/32"	13/32"	0.1697	0.1674	0
12-24 UNC LH										
Taperlock Plug 2B	**301522510**	**301522520**	$110.00	**301522540**	$236.00	13/32"	9/32"	0.1889	0.1933	0
Taperlock Plug 3B	**301522510**	**301522530**	$110.00	**301522550**	$236.00	13/32"	9/32"	0.1889	0.1922	0
Ring 2A	**361522510**	**361522530**	$301.00	**361522550**	$602.00	3/16"	3/16"	0.1879	0.1845	1T
Ring 3A	**361522520**	**361522540**	$301.00	**361522560**	$602.00	3/16"	3/16"	0.1889	0.1863	1T
Set Plug 2A	**371522510**	**371522530**	$159.00	**371522550**	$334.00	13/32"	13/32"	0.1879	0.1845	0
Set Plug 3A	**371522520**	**371522540**	$159.00	**371522560**	$334.00	13/32"	13/32"	0.1889	0.1863	0
12-28 UNF LH										
Taperlock Plug 2B	**301523510**	**301523520**	$110.00	**301523540**	$236.00	13/32"	9/32"	0.1928	0.1970	0
Taperlock Plug 3B	**301523510**	**301523530**	$110.00	**301523550**	$236.00	13/32"	9/32"	0.1928	0.1959	0
Ring 2A	**361523510**	**361523530**	$301.00	**361523550**	$602.00	3/16"	3/16"	0.1918	0.1886	1T
Ring 3A	**361523520**	**361523540**	$301.00	**361523560**	$602.00	3/16"	3/16"	0.1928	0.1904	1T
Set Plug 2A	**371523510**	**371523530**	$159.00	**371523550**	$334.00	13/32"	13/32"	0.1918	0.1886	0
Set Plug 3A	**371523520**	**371523540**	$159.00	**371523560**	$334.00	13/32"	13/32"	0.1928	0.1904	0

Standard Left Hand Thread Gages

INCH	Part No. Go Member	Part No. NoGo Member	Price	Part No. Go/NoGo Set	Price	Gage length Go (Min)	Gage length NoGo (Min)	Pitch Diameters Go	Pitch Diameters NoGo	Handle No.
1/4-20 UNC LH										
Taperlock Plug 2B	**301526010**	**301526020**	$110.00	**301526040**	$236.00	1/2"	5/16"	0.2175	0.2224	1
Taperlock Plug 3B	**301526010**	**301526030**	$110.00	**301526050**	$236.00	1/2"	5/16"	0.2175	0.2211	1
Ring 2A	**361526010**	**361526030**	$280.00	**361526050**	$560.00	11/32"	11/32"	0.2164	0.2127	2T
Ring 3A	**361526020**	**361526040**	$280.00	**361526060**	$560.00	11/32"	11/32"	0.2175	0.2147	2T
Set Plug 2A	**371526010**	**371526030**	$160.00	**371526050**	$336.00	3/4"	3/4"	0.2164	0.2127	1
Set Plug 3A	**371526020**	**371526040**	$160.00	**371526060**	$336.00	3/4"	3/4"	0.2175	0.2147	1
1/4-28 UNF LH										
Taperlock Plug 2B	**301527010**	**301527020**	$110.00	**301527040**	$236.00	1/2"	5/16"	0.2268	0.2311	1
Taperlock Plug 3B	**301527010**	**301527030**	$110.00	**301527050**	$236.00	1/2"	5/16"	0.2268	0.2300	1
Ring 2A	**361527010**	**361527030**	$280.00	**361527050**	$560.00	11/32"	11/32"	0.2258	0.2225	2T
Ring 3A	**361527020**	**361527040**	$280.00	**361527060**	$560.00	11/32"	11/32"	0.2268	0.2243	2T
Set Plug 2A	**371527010**	**371527030**	$160.00	**371527050**	$336.00	3/4"	3/4"	0.2258	0.2225	1
Set Plug 3A	**371527020**	**371527040**	$160.00	**371527060**	$336.00	3/4"	3/4"	0.2268	0.2243	1
5/16-18 UNC LH										
Taperlock Plug 2B	**301529510**	**301529520**	$113.00	**301529540**	$242.00	1/2"	5/16"	0.2764	0.2817	1
Taperlock Plug 3B	**301529510**	**301529530**	$113.00	**301529550**	$242.00	1/2"	5/16"	0.2764	0.2803	1
Ring 2A	**361529510**	**361529530**	$280.00	**361529550**	$560.00	11/32"	11/32"	0.2752	0.2712	2T
Ring 3A	**361529520**	**361529540**	$280.00	**361529560**	$560.00	11/32"	11/32"	0.2764	0.2734	2T
Set Plug 2A	**371529510**	**371529530**	$160.00	**371529550**	$336.00	3/4"	3/4"	0.2752	0.2712	1
Set Plug 3A	**371529520**	**371529540**	$160.00	**371529560**	$336.00	3/4"	3/4"	0.2764	0.2734	1
5/16-24 UNF LH										
Taperlock Plug 2B	**301530510**	**301530520**	$113.00	**301530540**	$242.00	1/2"	5/16"	0.2854	0.2902	1
Taperlock Plug 3B	**301530510**	**301530530**	$113.00	**301530550**	$242.00	1/2"	5/16"	0.2854	0.2890	1
Ring 2A	**361530510**	**361530530**	$280.00	**361530550**	$560.00	11/32"	11/32"	0.2843	0.2806	2T
Ring 3A	**361530520**	**361530540**	$280.00	**361530560**	$560.00	11/32"	11/32"	0.2854	0.2827	2T
Set Plug 2A	**371530510**	**371530530**	$160.00	**371530550**	$336.00	3/4"	3/4"	0.2843	0.2806	1
Set Plug 3A	**371530520**	**371530540**	$160.00	**371530560**	$336.00	3/4"	3/4"	0.2854	0.2827	1
3/8-16 UNC LH										
Taperlock Plug 2B	**301533010**	**301533020**	$113.00	**301533040**	$242.00	3/4"	3/8"	0.3344	0.3401	2
Taperlock Plug 3B	**301533010**	**301533030**	$113.00	**301533050**	$242.00	3/4"	3/8"	0.3344	0.3387	2
Ring 2A	**361533010**	**361533030**	$294.00	**361533050**	$588.00	7/16"	7/16"	0.3331	0.3287	3T
Ring 3A	**361533020**	**361533040**	$294.00	**361533060**	$588.00	7/16"	7/16"	0.3344	0.3311	3T
Set Plug 2A	**371533010**	**371533030**	$160.00	**371533050**	$336.00	1"	1"	0.3331	0.3287	2
Set Plug 3A	**371533020**	**371533040**	$160.00	**371533060**	$336.00	1"	1"	0.3344	0.3311	2
3/8-24 UNF LH										
Taperlock Plug 2B	**301534010**	**301534020**	$113.00	**301534040**	$242.00	3/4"	3/8"	0.3479	0.3528	2
Taperlock Plug 3B	**301534010**	**301534030**	$113.00	**301534050**	$242.00	3/4"	3/8"	0.3479	0.3516	2
Ring 2A	**361534010**	**361534030**	$294.00	**361534050**	$588.00	7/16"	7/16"	0.3468	0.3430	3T
Ring 3A	**361534020**	**361534040**	$294.00	**361534060**	$588.00	7/16"	7/16"	0.3479	0.3450	3T
Set Plug 2A	**371534010**	**371534030**	$160.00	**371534050**	$336.00	1"	1"	0.3468	0.3430	2
Set Plug 3A	**371534020**	**371534040**	$160.00	**371534060**	$336.00	1"	1"	0.3479	0.3450	2
7/16-14 UNC LH										
Taperlock Plug 2B	**301536510**	**301536520**	$113.00	**301536540**	$242.00	3/4"	3/8"	0.3911	0.3972	2
Taperlock Plug 3B	**301536510**	**301536530**	$113.00	**301536550**	$242.00	3/4"	3/8"	0.3911	0.3957	2
Ring 2A	**361536510**	**361536530**	$294.00	**361536550**	$588.00	7/16"	7/16"	0.3897	0.3850	3T
Ring 3A	**361536520**	**361536540**	$294.00	**361536560**	$588.00	7/16"	7/16"	0.3911	0.3876	3T
Set Plug 2A	**371536510**	**371536530**	$160.00	**371536550**	$336.00	1"	1"	0.3897	0.3850	2
Set Plug 3A	**371536520**	**371536540**	$160.00	**371536560**	$336.00	1"	1"	0.3911	0.3876	2
7/16-20 UNF LH										
Taperlock Plug 2B	**301537510**	**301537520**	$113.00	**301537540**	$242.00	3/4"	3/8"	0.4050	0.4104	2
Taperlock Plug 3B	**301537510**	**301537530**	$113.00	**301537550**	$242.00	3/4"	3/8"	0.4050	0.4091	2
Ring 2A	**361537510**	**361537530**	$290.00	**361537550**	$580.00	7/16"	7/16"	0.4037	0.3995	3T
Ring 3A	**361537520**	**361537540**	$290.00	**361537560**	$580.00	7/16"	7/16"	0.4050	0.4019	3T
Set Plug 2A	**371537510**	**371537530**	$160.00	**371537550**	$336.00	1"	1"	0.4037	0.3995	2
Set Plug 3A	**371537520**	**371537540**	$160.00	**371537560**	$336.00	1"	1"	0.4050	0.4019	2

Standard Left Hand Thread Gages

INCH	Part No. Go Member	Part No. NoGo Member	Price	Part No. Go/NoGo Set	Price	Gage length Go (Min)	Gage length NoGo (Min)	Pitch Diameters Go	Pitch Diameters NoGo	Handle No.
1/2-13 UNC LH										
Taperlock Plug 2B	**301540010**	**301540020**	$113.00	**301540040**	$242.00	3/4"	3/8"	0.4500	0.4565	2
Taperlock Plug 3B	**301540010**	**301540030**	$113.00	**301540050**	$242.00	3/4"	3/8"	0.4500	0.4548	2
Ring 2A	**361540010**	**361540030**	$299.00	**361540050**	$598.00	7/16"	7/16"	0.4485	0.4435	3T
Ring 3A	**361540020**	**361540040**	$299.00	**361540060**	$598.00	7/16"	7/16"	0.4500	0.4463	3T
Set Plug 2A	**371540010**	**371540030**	$157.00	**371540050**	$330.00	1"	1"	0.4485	0.4435	2
Set Plug 3A	**371540020**	**371540040**	$157.00	**371540060**	$330.00	1"	1"	0.4500	0.4463	2
1/2-20 UNF LH										
Taperlock Plug 2B	**301541010**	**301541020**	$113.00	**301541040**	$242.00	3/4"	3/8"	0.4675	0.4731	2
Taperlock Plug 3B	**301541010**	**301541030**	$113.00	**301541050**	$242.00	3/4"	3/8"	0.4675	0.4717	2
Ring 2A	**361541010**	**361541030**	$299.00	**361541050**	$598.00	7/16"	7/16"	0.4662	0.4619	3T
Ring 3A	**361541020**	**361541040**	$299.00	**361541060**	$598.00	7/16"	7/16"	0.4675	0.4643	3T
Set Plug 2A	**371541010**	**371541030**	$160.00	**371541050**	$336.00	1"	1"	0.4662	0.4619	2
Set Plug 3A	**371541020**	**371541040**	$160.00	**371541060**	$336.00	1"	1"	0.4675	0.4643	2
9/16-12 UNC LH										
Taperlock Plug 2B	**301543510**	**301543520**	$113.00	**301543540**	$242.00	7/8"	1/2"	0.5084	0.5152	3
Taperlock Plug 3B	**301543510**	**301543530**	$113.00	**301543550**	$242.00	7/8"	1/2"	0.5084	0.5135	3
Ring 2A	**361543510**	**361543530**	$305.00	**361543550**	$610.00	3/4"	9/16"	0.5068	0.5016	4T
Ring 3A	**361543520**	**361543540**	$305.00	**361543560**	$610.00	3/4"	9/16"	0.5084	0.5045	4T
Set Plug 2A	**371543510**	**371543530**	$160.00	**371543550**	$336.00	1-7/8"	1-1/4"	0.5068	0.5016	3
Set Plug 3A	**371543520**	**371543540**	$160.00	**371543560**	$336.00	1-7/8"	1-1/4"	0.5084	0.5045	3
9/16-18 UNF LH										
Taperlock Plug 2B	**301544510**	**301544520**	$113.00	**301544540**	$242.00	7/8"	1/2"	0.5264	0.5323	3
Taperlock Plug 3B	**301544510**	**301544530**	$113.00	**301544550**	$242.00	7/8"	1/2"	0.5264	0.5308	3
Ring 2A	**361544510**	**361544530**	$305.00	**361544550**	$610.00	9/16"	9/16"	0.5250	0.5205	4T
Ring 3A	**361544520**	**361544540**	$305.00	**361544560**	$610.00	9/16"	9/16"	0.5264	0.5230	4T
Set Plug 2A	**371544510**	**371544530**	$160.00	**371544550**	$336.00	1-1/4"	1-1/4"	0.5250	0.5205	3
Set Plug 3A	**371544520**	**371544540**	$160.00	**371544560**	$336.00	1-1/4"	1-1/4"	0.5264	0.5230	3
5/8-11 UNC LH										
Taperlock Plug 2B	**301547010**	**301547020**	$117.00	**301547040**	$248.00	7/8"	1/2"	0.5660	0.5732	3
Taperlock Plug 3B	**301547010**	**301547030**	$117.00	**301547050**	$248.00	7/8"	1/2"	0.5660	0.5714	3
Ring 2A	**361547010**	**361547030**	$310.00	**361547050**	$620.00	3/4"	9/16"	0.5644	0.5589	4T
Ring 3A	**361547020**	**361547040**	$310.00	**361547060**	$620.00	3/4"	9/16"	0.5660	0.5619	4T
Set Plug 2A	**371547010**	**371547030**	$168.00	**371547050**	$352.00	1-7/8"	1-1/4"	0.5644	0.5589	3
Set Plug 3A	**371547020**	**371547040**	$168.00	**371547060**	$352.00	1-7/8"	1-1/4"	0.5660	0.5619	3
5/8-18 UNF LH										
Taperlock Plug 2B	**301548010**	**301548020**	$117.00	**301548040**	$248.00	7/8"	1/2"	0.5889	0.5949	3
Taperlock Plug 3B	**301548010**	**301548030**	$117.00	**301548050**	$248.00	7/8"	1/2"	0.5889	0.5934	3
Ring 2A	**361548010**	**361548030**	$310.00	**361548050**	$620.00	9/16"	9/16"	0.5875	0.5828	4T
Ring 3A	**361548020**	**361548040**	$310.00	**361548060**	$620.00	9/16"	9/16"	0.5889	0.5854	4T
Set Plug 2A	**371548010**	**371548030**	$168.00	**371548050**	$352.00	1-1/4"	1-1/4"	0.5875	0.5828	3
Set Plug 3A	**371548020**	**371548040**	$168.00	**371548060**	$352.00	1-1/4"	1-1/4"	0.5889	0.5854	3
3/4-10 UNC LH										
Taperlock Plug 2B	**301552010**	**301552020**	$117.00	**301552040**	$250.00	7/8"	1/2"	0.6850	0.6927	3
Taperlock Plug 3B	**301552010**	**301552030**	$117.00	**301552050**	$250.00	7/8"	1/2"	0.6850	0.6907	3
Ring 2A	**361552010**	**361552030**	$318.00	**361552050**	$636.00	3/4"	9/16"	0.6832	0.6773	4T
Ring 3A	**361552020**	**361552040**	$318.00	**361552060**	$636.00	3/4"	9/16"	0.6850	0.6806	4T
Set Plug 2A	**371552010**	**371552030**	$168.00	**371552050**	$352.00	1-7/8"	1-1/4"	0.6832	0.6773	3
Set Plug 3A	**371552020**	**371552040**	$168.00	**371552060**	$352.00	1-7/8"	1-1/4"	0.6850	0.6806	3
3/4-16 UNF LH										
Taperlock Plug 2B	**301553010**	**301553020**	$117.00	**301553040**	$250.00	7/8"	1/2"	0.7094	0.7159	3
Taperlock Plug 3B	**301553010**	**301553030**	$117.00	**301553050**	$250.00	7/8"	1/2"	0.7094	0.7143	3
Ring 2A	**361553010**	**361553030**	$318.00	**361553050**	$636.00	9/16"	9/16"	0.7079	0.7029	4T
Ring 3A	**361553020**	**361553040**	$318.00	**361553060**	$636.00	9/16"	9/16"	0.7094	0.7056	4T
Set Plug 2A	**371553010**	**371553030**	$168.00	**371553050**	$352.00	1-1/4"	1-1/4"	0.7079	0.7029	3
Set Plug 3A	**371553020**	**371553040**	$168.00	**371553060**	$352.00	1-1/4"	1-1/4"	0.7094	0.7056	3

Standard Left Hand Thread Gages

INCH	Part No. Go Member	Part No. NoGo Member	Price	Part No. Go/NoGo Set	Price	Gage length Go (Min)	Gage length NoGo (Min)	Pitch Diameters Go	Pitch Diameters NoGo	Handle No.
7/8-9 UNC LH										
Taperlock Plug 2B	**301557010**	**301557020**	$135.00	**301557040**	$287.25	1"	5/8"	0.8028	0.8110	4
Taperlock Plug 3B	**301557010**	**301557030**	$135.00	**301557050**	$287.25	1"	5/8"	0.8028	0.8089	4
Ring 2A	**361557010**	**361557030**	$334.00	**361557050**	$668.00	15/16"	11/16"	0.8009	0.7946	5T
Ring 3A	**361557020**	**361557040**	$334.00	**361557060**	$668.00	15/16"	11/16"	0.8028	0.7981	5T
Set Plug 2A	**371557010**	**371557030**	$193.00	**371557050**	$403.25	2-1/8"	1-1/2"	0.8009	0.7946	4
Set Plug 3A	**371557020**	**371557040**	$193.00	**371557060**	$403.25	2-1/8"	1-1/2"	0.8028	0.7981	4
7/8-14 UNF LH										
Taperlock Plug 2B	**301558010**	**301558020**	$119.00	**301558040**	$255.25	1"	5/8"	0.8286	0.8356	4
Taperlock Plug 3B	**301558010**	**301558030**	$119.00	**301558050**	$255.25	1"	5/8"	0.8286	0.8339	4
Ring 2A	**361558010**	**361558030**	$326.00	**361558050**	$652.00	11/16"	11/16"	0.8270	0.8216	5T
Ring 3A	**361558020**	**361558040**	$326.00	**361558060**	$652.00	11/16"	11/16"	0.8286	0.8245	5T
Set Plug 2A	**371558010**	**371558030**	$178.00	**371558050**	$373.25	1-1/2"	1-1/2"	0.8270	0.8216	4
Set Plug 3A	**371558020**	**371558040**	$178.00	**371558060**	$373.25	1-1/2"	1-1/2"	0.8286	0.8245	4
1-8 UNC LH										
Taperlock Plug 2B	**301562010**	**301562020**	$141.00	**301562040**	$299.25	1"	5/8"	0.9188	0.9276	4
Taperlock Plug 3B	**301562010**	**301562030**	$141.00	**301562050**	$299.25	1"	5/8"	0.9188	0.9254	4
Ring 2A	**361562010**	**361562030**	$334.00	**361562050**	$668.00	15/16"	11/16"	0.9168	0.9100	5T
Ring 3A	**361562020**	**361562040**	$334.00	**361562060**	$668.00	15/16"	11/16"	0.9188	0.9137	5T
Set Plug 2A	**371562010**	**371562030**	$200.00	**371562050**	$417.25	2-1/8"	1-1/2"	0.9168	0.9100	4
Set Plug 3A	**371562020**	**371562040**	$200.00	**371562060**	$417.25	2-1/8"	1-1/2"	0.9188	0.9137	4
1-12 UNF LH										
Taperlock Plug 2B	**301563010**	**301563020**	$132.00	**301563040**	$281.25	1"	5/8"	0.9459	0.9535	4
Taperlock Plug 3B	**301563010**	**301563030**	$132.00	**301563050**	$281.25	1"	5/8"	0.9459	0.9516	4
Ring 2A	**361563010**	**361563030**	$329.00	**361563050**	$658.00	11/16"	11/16"	0.9441	0.9382	5T
Ring 3A	**361563020**	**361563040**	$329.00	**361563060**	$658.00	11/16"	11/16"	0.9459	0.9415	5T
Set Plug 2A	**371563010**	**371563030**	$187.00	**371563050**	$391.25	1-1/2"	1-1/2"	0.9441	0.9382	4
Set Plug 3A	**371563020**	**371563040**	$187.00	**371563060**	$391.25	1-1/2"	1-1/2"	0.9459	0.9415	4
1 1/8-7 UNC LH										
Taperlock Plug 2B	**301569010**	**301569020**	$175.00	**301569040**	$367.25	1"	5/8"	1.0322	1.0416	4
Taperlock Plug 3B	**301569010**	**301569030**	$175.00	**301569050**	$367.25	1"	5/8"	1.0322	1.0393	4
Ring 2A	**361569010**	**361569030**	$409.00	**361569050**	$818.00	15/16"	11/16"	1.0300	1.0228	5T
Ring 3A	**361569020**	**361569040**	$409.00	**361569060**	$818.00	15/16"	11/16"	1.0322	1.0268	5T
Set Plug 2A	**371569010**	**371569030**	$255.00	**371569050**	$527.25	2-1/8"	1-1/2"	1.0300	1.0228	4
Set Plug 3A	**371569020**	**371569040**	$255.00	**371569060**	$527.25	2-1/8"	1-1/2"	1.0322	1.0268	4
1 1/8-12 UNF LH										
Taperlock Plug 2B	**301570010**	**301570020**	$141.00	**301570040**	$299.25	1"	5/8"	1.0709	1.0787	4
Taperlock Plug 3B	**301570010**	**301570030**	$141.00	**301570050**	$299.25	1"	5/8"	1.0709	1.0768	4
Ring 2A	**361570010**	**361570030**	$334.00	**361570050**	$668.00	11/16"	11/16"	1.0691	1.0631	5T
Ring 3A	**361570020**	**361570040**	$334.00	**361570060**	$668.00	11/16"	11/16"	1.0709	1.0664	5T
Set Plug 2A	**371570010**	**371570030**	$200.00	**371570050**	$417.25	1-1/2"	1-1/2"	1.0691	1.0631	4
Set Plug 3A	**371570020**	**371570040**	$200.00	**371570060**	$417.25	1-1/2"	1-1/2"	1.0709	1.0664	4
1 1/4-7 UNC LH										
Taperlock Plug 2B	**301575010**	**301575020**	$175.00	**301575040**	$368.50	1-1/4"	3/4"	1.1572	1.1668	5
Taperlock Plug 3B	**301575010**	**301575030**	$175.00	**301575050**	$368.50	1-1/4"	3/4"	1.1572	1.1644	5
Ring 2A	**361575010**	**361575030**	$427.00	**361575050**	$854.00	1-1/8"	3/4"	1.1550	1.1476	6T
Ring 3A	**361575020**	**361575040**	$427.00	**361575060**	$854.00	1-1/8"	3/4"	1.1572	1.1517	6T
Set Plug 2A	**371575010**	**371575030**	$250.00	**371575050**	$518.50	2-3/8"	1-5/8"	1.1550	1.1476	5
Set Plug 3A	**371575020**	**371575040**	$250.00	**371575060**	$518.50	2-3/8"	1-5/8"	1.1572	1.1517	5
1 1/4-12 UNF LH										
Taperlock Plug 2B	**301576010**	**301576020**	$141.00	**301576040**	$300.50	1"	3/4"	1.1959	1.2039	5
Taperlock Plug 3B	**301576010**	**301576030**	$141.00	**301576050**	$300.50	1"	3/4"	1.1959	1.2019	5
Ring 2A	**361576010**	**361576030**	$359.00	**361576050**	$718.00	3/4"	3/4"	1.1941	1.1879	6T
Ring 3A	**361576020**	**361576040**	$359.00	**361576060**	$718.00	3/4"	3/4"	1.1959	1.1913	6T
Set Plug 2A	**371576010**	**371576030**	$200.00	**371576050**	$418.50	1-5/8"	1-5/8"	1.1941	1.1879	5
Set Plug 3A	**371576020**	**371576040**	$200.00	**371576060**	$418.50	1-5/8"	1-5/8"	1.1959	1.1913	5

Standard Left Hand Thread Gages

INCH	Part No. Go Member	Part No. NoGo Member	Price	Part No. Go/NoGo Set	Price	Gage length Go (Min)	Gage length NoGo (Min)	Pitch Diameters Go	Pitch Diameters NoGo	Handle No.
1 3/8-6 UNC LH										
Taperlock Plug 2B	**301581010**	**301581020**	$183.00	**301581040**	$384.50	1-1/4"	3/4"	1.2667	1.2771	5
Taperlock Plug 3B	**301581010**	**301581030**	$183.00	**301581050**	$384.50	1-1/4"	3/4"	1.2667	1.2745	5
Ring 2A	**361581010**	**361581030**	$440.00	**361581050**	$880.00	1-1/8"	3/4"	1.2643	1.2563	6T
Ring 3A	**361581020**	**361581040**	$440.00	**361581060**	$880.00	1-1/8"	3/4"	1.2667	1.2607	6T
Set Plug 2A	**371581010**	**371581030**	$265.00	**371581050**	$548.50	2-3/8"	1-5/8"	1.2643	1.2563	5
Set Plug 3A	**371581020**	**371581040**	$265.00	**371581060**	$548.50	2-3/8"	1-5/8"	1.2667	1.2607	5
1 3/8-12 UNF LH										
Taperlock Plug 2B	**301582010**	**301582020**	$148.00	**301582040**	$314.50	1"	3/4"	1.3209	1.3291	5
Taperlock Plug 3B	**301582010**	**301582030**	$148.00	**301582050**	$314.50	1"	3/4"	1.3209	1.3270	5
Ring 2A	**361582010**	**361582030**	$365.00	**361582050**	$730.00	3/4"	3/4"	1.3190	1.3127	6T
Ring 3A	**361582020**	**361582040**	$365.00	**361582060**	$730.00	3/4"	3/4"	1.3209	1.3162	6T
Set Plug 2A	**371582010**	**371582030**	$215.00	**371582050**	$448.50	1-5/8"	1-5/8"	1.3190	1.3127	5
Set Plug 3A	**371582020**	**371582040**	$215.00	**371582060**	$448.50	1-5/8"	1-5/8"	1.3209	1.3162	5
1 1/2-6 UNC LH										
Taperlock Plug 2B	**301587010**	**301587020**	$192.00	**301587040**	$402.50	1-1/4"	3/4"	1.3917	1.4022	5
Taperlock Plug 3B	**301587010**	**301587030**	$192.00	**301587050**	$402.50	1-1/4"	3/4"	1.3917	1.3996	5
Ring 2A	**361587010**	**361587030**	$454.00	**361587050**	$908.00	1-1/8"	3/4"	1.3893	1.3812	6T
Ring 3A	**361587020**	**361587040**	$454.00	**361587060**	$908.00	1-1/8"	3/4"	1.3917	1.3856	6T
Set Plug 2A	**371587010**	**371587030**	$278.00	**371587050**	$574.50	2-3/8"	1-5/8"	1.3893	1.3812	5
Set Plug 3A	**371587020**	**371587040**	$278.00	**371587060**	$574.50	2-3/8"	1-5/8"	1.3917	1.3856	5
1 1/2-12 UNF LH										
Taperlock Plug 2B	**301588010**	**301588020**	$168.00	**301588040**	$354.50	1"	3/4"	1.4459	1.4542	5
Taperlock Plug 3B	**301588010**	**301588030**	$168.00	**301588050**	$354.50	1"	3/4"	1.4459	1.4522	5
Ring 2A	**361588010**	**361588030**	$389.00	**361588050**	$778.00	3/4"	3/4"	1.4440	1.4376	6T
Ring 3A	**361588020**	**361588040**	$389.00	**361588060**	$778.00	3/4"	3/4"	1.4459	1.4411	6T
Set Plug 2A	**371588010**	**371588030**	$243.00	**371588050**	$504.50	1-5/8"	1-5/8"	1.4440	1.4376	5
Set Plug 3A	**371588020**	**371588040**	$243.00	**371588060**	$504.50	1-5/8"	1-5/8"	1.4459	1.4411	5

Standard Thread Gages

METRIC	Part No. Go Member	Part No. NoGo Member	Price	Part No. Go/NoGo Set	Price	Gage length Go (Min)	Gage length NoGo (Min)	Pitch Diameters Go	Pitch Diameters NoGo	Handle No.
M1.6 X .35										
Taperlock Plug 6H	**302101010**	**302101020**	$70.00	**302101030**	$157.25	6.4mm	6.4mm	1.373mm	1.458mm	000
Reversible Plug 6H	**312101010**	**312101020**	$108.00	**312101030**	$234.75	12.7mm	12.7mm	1.373mm	1.458mm	1W
Ring 6g	**362101010**	**362101020**	$231.00	**362101030**	$462.00	2.4mm	2.4mm	1.354mm	1.291mm	1T
Set Plug 6g	**372101010**	**372101020**	$142.00	**372101030**	$301.25	5.6mm	5.6mm	1.354mm	1.291mm	000
M1.8 X .35										
Taperlock Plug 6H	**302102510**	**302102520**	$70.00	**302102530**	$157.25	6.4mm	6.4mm	1.573mm	1.658mm	000
Reversible Plug 6H	**312102510**	**312102520**	$108.00	**312102530**	$234.75	12.7mm	12.7mm	1.573mm	1.658mm	1W
Ring 6g	**362102510**	**362102520**	$231.00	**362102530**	$462.00	2.4mm	2.4mm	1.554mm	1.491mm	1T
Set Plug 6g	**372102510**	**372102520**	$142.00	**372102530**	$301.25	5.6mm	5.6mm	1.554mm	1.491mm	000
M2.0 X .40										
Taperlock Plug 6H	**302104010**	**302104020**	$70.00	**302104030**	$157.25	6.4mm	6.4mm	1.740mm	1.830mm	000
Reversible Plug 6H	**312104010**	**312104020**	$98.00	**312104030**	$214.75	15.9mm	15.9mm	1.740mm	1.830mm	2W
Ring 6g	**362104010**	**362104020**	$186.00	**362104030**	$372.00	2.4mm	2.4mm	1.721mm	1.654mm	1T
Set Plug 6g	**372104010**	**372104020**	$139.00	**372104030**	$295.25	5.6mm	5.6mm	1.721mm	1.654mm	000
M2.2 X .45										
Taperlock Plug 6H	**302105510**	**302105520**	$70.00	**302105530**	$157.25	6.4mm	4.8mm	1.908mm	2.003mm	000
Reversible Plug 6H	**312105510**	**312105520**	$98.00	**312105530**	$214.75	15.9mm	15.9mm	1.908mm	2.003mm	2W
Ring 6g	**362105510**	**362105520**	$186.00	**362105530**	$372.00	2.4mm	2.4mm	1.888mm	1.817mm	1T
Set Plug 6g	**372105510**	**372105520**	$139.00	**372105530**	$295.25	5.6mm	5.6mm	1.888mm	1.817mm	000
M2.50 X .35										
Taperlock Plug 6H	**302106010**	**302106020**	$165.00	**302106030**	$347.25	6.4mm	4.8mm	2.273mm	2.358mm	000
Reversible Plug 6H	**312106010**	**312106020**	$214.00	**312106030**	$446.75	15.9mm	15.9mm	2.273mm	2.358mm	2W
Ring 6g	**362106010**	**362106020**	$485.00	**362106030**	$970.00	4.0mm	4.0mm	2.254mm	2.191mm	1T
Set Plug 6g	**372106010**	**372106020**	$241.00	**372106030**	$499.25	9.5mm	9.5mm	2.254mm	2.191mm	000
M2.5 X .45										
Taperlock Plug 6H	**302107010**	**302107020**	$64.00	**302107030**	$145.25	6.4mm	4.8mm	2.208mm	2.303mm	000
Reversible Plug 6H	**312107010**	**312107020**	$95.00	**312107030**	$208.75	15.9mm	15.9mm	2.208mm	2.303mm	2W
Ring 6g	**362107010**	**362107020**	$186.00	**362107030**	$372.00	4.0mm	4.0mm	2.188mm	2.117mm	1T
Set Plug 6g	**372107010**	**372107020**	$139.00	**372107030**	$295.25	9.5mm	9.5mm	2.188mm	2.117mm	000
M3.0 X .35										
Taperlock Plug 6H	**302108010**	**302108020**	$165.00	**302108030**	$346.00	5.6mm	4.0mm	2.773mm	2.863mm	00
Reversible Plug 6H	**312108010**	**312108020**	$212.00	**312108030**	$442.75	15.9mm	15.9mm	2.773mm	2.863mm	2W
Ring 6g	**362108010**	**362108020**	$485.00	**362108030**	$970.00	4.0mm	4.0mm	2.754mm	2.687mm	1T
Set Plug 6g	**372108010**	**372108020**	$241.00	**372108030**	$498.00	9.5mm	9.5mm	2.754mm	2.687mm	00
M3.0 X .50										
Taperlock Plug 6H	**302108510**	**302108520**	$64.00	**302108530**	$144.00	5.6mm	4.0mm	2.675mm	2.775mm	00
Reversible Plug 6H	**312108510**	**312108520**	$81.00	**312108530**	$180.75	15.9mm	15.9mm	2.675mm	2.775mm	2W
Ring 6g	**362108510**	**362108520**	$161.00	**362108530**	$322.00	4.0mm	4.0mm	2.655mm	2.580mm	1T
Set Plug 6g	**372108510**	**372108520**	$135.00	**372108530**	$286.00	9.5mm	9.5mm	2.655mm	2.580mm	00
M3.5 X .35										
Taperlock Plug 6H	**302109010**	**302109020**	$165.00	**302109030**	$346.00	5.6mm	4.0mm	3.273mm	3.363mm	00
Reversible Plug 6H	**312109010**	**312109020**	$212.00	**312109030**	$442.75	19.0mm	19.0mm	3.273mm	3.363mm	2W
Ring 6g	**362109010**	**362109020**	$485.00	**362109030**	$970.00	4.0mm	4.0mm	3.254mm	3.187mm	1T
Set Plug 6g	**372109010**	**372109020**	$241.00	**372109030**	$498.00	9.5mm	9.5mm	3.254mm	3.187mm	00
M3.5 X .60										
Taperlock Plug 6H	**302110010**	**302110020**	$58.00	**302110030**	$132.00	7.9mm	5.6mm	3.110mm	3.222mm	00
Reversible Plug 6H	**312110010**	**312110020**	$81.00	**312110030**	$180.75	19.0mm	19.0mm	3.110mm	3.222mm	2W
Ring 6g	**362110010**	**362110020**	$160.00	**362110030**	$320.00	4.0mm	4.0mm	3.089mm	3.004mm	1T
Set Plug 6g	**372110010**	**372110020**	$129.00	**372110030**	$274.00	9.5mm	9.5mm	3.089mm	3.004mm	00
M4.0 X .50										
Taperlock Plug 6H	**302111010**	**302111020**	$140.00	**302111030**	$296.00	7.1mm	5.6mm	3.675mm	3.775mm	0
Reversible Plug 6H	**312111010**	**312111020**	$173.00	**312111030**	$364.75	19.0mm	19.0mm	3.675mm	3.775mm	2W
Ring 6g	**362111010**	**362111020**	$387.00	**362111030**	$774.00	4.0mm	4.0mm	3.655mm	3.580mm	1T
Set Plug 6g	**372111010**	**372111020**	$198.00	**372111030**	$412.00	10.3mm	10.3mm	3.655mm	3.580mm	0

"J" Series threads availible upon request

Standard Thread Gages

METRIC	Part No. Go Member	Part No. NoGo Member	Price	Part No. Go/NoGo Set	Price	Gage length Go (Min)	Gage length NoGo (Min)	Pitch Diameters Go	Pitch Diameters NoGo	Handle No.
M4.0 X .70										
Taperlock Plug 6H	**302111510**	**302111520**	$58.00	**302111530**	$132.00	10.3mm	7.1mm	3.545mm	3.663mm	0
Reversible Plug 6H	**312111510**	**312111520**	$81.00	**312111530**	$180.75	19.0mm	19.0mm	3.545mm	3.663mm	2W
Ring 6g	**362111510**	**362111520**	$160.00	**362111530**	$320.00	4.0mm	4.0mm	3.523mm	3.433mm	1T
Set Plug 6g	**372111510**	**372111520**	$129.00	**372111530**	$274.00	10.3mm	10.3mm	3.523mm	3.433mm	0
M4.5 X .50										
Taperlock Plug 6H	**302112010**	**302112020**	$140.00	**302112030**	$296.00	7.1mm	5.6mm	4.175mm	4.275mm	0
Reversible Plug 6H	**312112010**	**312112020**	$173.00	**312112030**	$364.75	19.0mm	19.0mm	4.175mm	4.275mm	2W
Ring 6g	**362112010**	**362112020**	$396.00	**362112030**	$792.00	4.8mm	4.8mm	4.155mm	4.080mm	1T
Set Plug 6g	**372112010**	**372112020**	$198.00	**372112030**	$412.00	10.3mm	10.3mm	4.155mm	4.080mm	0
M4.5 X .75										
Taperlock Plug 6H	**302113010**	**302113020**	$58.00	**302113030**	$132.00	10.3mm	7.1mm	4.013mm	4.131mm	0
Reversible Plug 6H	**312113010**	**312113020**	$81.00	**312113030**	$180.75	19.0mm	19mm	4.013mm	4.131mm	2W
Ring 6g	**362113010**	**362113020**	$160.00	**362113030**	$320.00	4.8mm	4.8mm	3.991mm	3.901mm	1T
Set Plug 6g	**372113010**	**372113020**	$129.00	**372113030**	$274.00	10.3mm	10.3mm	3.991mm	3.901mm	0
M5.0 X .50										
Taperlock Plug 6H	**302113510**	**302113520**	$140.00	**302113530**	$296.00	7.1mm	5.6mm	4.675mm	4.775mm	0
Reversible Plug 6H	**312113510**	**312113520**	$173.00	**312113530**	$366.75	22.2mm	22.2mm	4.675mm	4.775mm	3W
Ring 6g	**362113510**	**362113520**	$403.00	**362113530**	$806.00	4.8mm	4.8mm	4.655mm	4.580mm	1T
Set Plug 6g	**372113510**	**372113520**	$198.00	**372113530**	$412.00	10.3mm	10.3mm	4.655mm	4.580mm	0
M5.0 X .80										
Taperlock Plug 6H	**302114510**	**302114520**	$58.00	**302114530**	$132.00	10.3mm	7.1mm	4.480mm	4.605mm	0
Reversible Plug 6H	**312114510**	**312114520**	$81.00	**312114530**	$182.75	22.2mm	22.2mm	4.480mm	4.605mm	3W
Ring 6g	**362114510**	**362114520**	$160.00	**362114530**	$320.00	4.8mm	4.8mm	4.456mm	4.361mm	1T
Set Plug 6g	**372114510**	**372114520**	$129.00	**372114530**	$274.00	10.3mm	10.3mm	4.456mm	4.361mm	0
M5.5 X .50										
Taperlock Plug 6H	**302115010**	**302115020**	$140.00	**302115030**	$296.00	7.1mm	5.6mm	5.175mm	5.275mm	0
Reversible Plug 6H	**312115010**	**312115020**	$173.00	**312115030**	$366.75	22.2mm	22.2mm	5.175mm	5.275mm	3W
Ring 6g	**362115010**	**362115020**	$409.00	**362115030**	$818.00	4.8mm	4.8mm	5.155mm	5.080mm	1T
Set Plug 6g	**372115010**	**372115020**	$198.00	**372115030**	$412.00	10.3mm	10.3mm	5.155mm	5.080mm	0
M5.5 X .75										
Taperlock Plug 6H	**302116010**	**302116020**	$128.00	**302116030**	$272.00	10.3mm	7.1mm	5.013mm	5.131mm	0
Reversible Plug 6H	**312116010**	**312116020**	$161.00	**312116030**	$342.75	22.2mm	22.2mm	5.013mm	5.131mm	3W
Ring 6g	**362116010**	**362116020**	$342.00	**362116030**	$684.00	4.8mm	4.8mm	4.991mm	4.901mm	1T
Set Plug 6g	**372116010**	**372116020**	$184.00	**372116030**	$384.00	10.3mm	10.3mm	4.991mm	4.901mm	0
M6.0 X .75										
Taperlock Plug 6H	**302117010**	**302117020**	$128.00	**302117030**	$272.00	12.7mm	7.9mm	5.513mm	5.645mm	1
Reversible Plug 6H	**312117010**	**312117020**	$161.00	**312117030**	$342.75	22.2mm	22.2mm	5.513mm	5.645mm	3W
Ring 6g	**362117010**	**362117020**	$342.00	**362117030**	$684.00	8.7mm	8.7mm	5.491mm	5.391mm	2T
Set Plug 6g	**372117010**	**372117020**	$184.00	**372117030**	$384.00	19.0mm	19.0mm	5.491mm	5.391mm	1
M6.0 X 1.00										
Taperlock Plug 6H	**302117510**	**302117520**	$44.00	**302117530**	$104.00	12.7mm	7.9mm	5.350mm	5.500mm	1
Reversible Plug 6H	**312117510**	**312117520**	$64.00	**312117530**	$148.75	22.2mm	22.2mm	5.350mm	5.500mm	3W
Ring 6g	**362117510**	**362117520**	$139.00	**362117530**	$278.00	8.7mm	8.7mm	5.324mm	5.212mm	2T
Set Plug 6g	**372117510**	**372117520**	$113.00	**372117530**	$242.00	19.0mm	19.0mm	5.324mm	5.212mm	1
M7.0 X .75										
Taperlock Plug 6H	**302118010**	**302118020**	$141.00	**302118030**	$298.00	12.7mm	7.9mm	6.513mm	6.645mm	1
Reversible Plug 6H	**312118010**	**312118020**	$175.00	**312118030**	$370.75	22.2mm	22.2mm	6.513mm	6.645mm	3W
Ring 6g	**362118010**	**362118020**	$359.00	**362118030**	$718.00	8.7mm	8.7mm	6.491mm	6.391mm	2T
Set Plug 6g	**372118010**	**372118020**	$200.00	**372118030**	$416.00	19.0mm	19.0mm	6.491mm	6.391mm	1
M7.0 X 1.00										
Taperlock Plug 6H	**302119010**	**302119020**	$44.00	**302119030**	$104.00	12.7mm	7.9mm	6.350mm	6.500mm	1
Reversible Plug 6H	**312119010**	**312119020**	$64.00	**312119030**	$148.75	22.2mm	22.2mm	6.350mm	6.500mm	3W
Ring 6g	**362119010**	**362119020**	$139.00	**362119030**	$278.00	8.7mm	8.7mm	6.324mm	6.212mm	2T
Set Plug 6g	**372119010**	**372119020**	$113.00	**372119030**	$242.00	19.0mm	19.0mm	6.324mm	6.212mm	1

Standard Thread Gages

METRIC	Part No. Go Member	Part No. NoGo Member	Price	Part No. Go/NoGo Set	Price	Gage length Go (Min)	Gage length NoGo (Min)	Pitch Diameters Go	Pitch Diameters NoGo	Handle No.
M8.0 X .75										
Taperlock Plug 6H	**302119510**	**302119520**	$141.00	**302119530**	$298.00	12.7mm	7.9mm	7.513mm	7.645mm	1
Reversible Plug 6H	**312119510**	**312119520**	$175.00	**312119530**	$371.50	25.4mm	25.4mm	7.513mm	7.645mm	4W
Ring 6g	**362119510**	**362119520**	$367.00	**362119530**	$734.00	8.7mm	8.7mm	7.491mm	7.391mm	2T
Set Plug 6g	**372119510**	**372119520**	$200.00	**372119530**	$416.00	19.0mm	19.0mm	7.491mm	7.391mm	1
M8.0 X 1.00										
Taperlock Plug 6H	**302120010**	**302120020**	$44.00	**302120030**	$104.00	12.7mm	7.9mm	7.350mm	7.500mm	1
Reversible Plug 6H	**312120010**	**312120020**	$64.00	**312120030**	$149.50	25.4mm	25.4mm	7.350mm	7.500mm	4W
Ring 6g	**362120010**	**362120020**	$139.00	**362120030**	$278.00	8.7mm	8.7mm	7.324mm	7.212mm	2T
Set Plug 6g	**372120010**	**372120020**	$113.00	**372120030**	$242.00	19.0mm	19.0mm	7.324mm	7.212mm	1
M8.0 X 1.25										
Taperlock Plug 6H	**302120510**	**302120520**	$44.00	**302120530**	$104.00	12.7mm	7.9mm	7.188mm	7.348mm	1
Reversible Plug 6H	**312120510**	**312120520**	$64.00	**312120530**	$149.50	25.4mm	25.4mm	7.188mm	7.348mm	4W
Ring 6g	**362120510**	**362120520**	$139.00	**362120530**	$278.00	8.7mm	8.7mm	7.160mm	7.042mm	2T
Set Plug 6g	**372120510**	**372120520**	$113.00	**372120530**	$242.00	19.0mm	19.0mm	7.160mm	7.042mm	1
M9.0 X .75										
Taperlock Plug 6H	**302120710**	**302120720**	$141.00	**302120730**	$298.00	12.7mm	7.9mm	8.513mm	8.645mm	1
Reversible Plug 6H	**312120710**	**312120720**	$175.00	**312120730**	$371.50	28.6mm	28.6mm	8.513mm	8.645mm	4W
Ring 6g	**362120710**	**362120720**	$367.00	**362120730**	$734.00	8.7mm	8.7mm	8.491mm	8.391mm	2T
Set Plug 6g	**372120710**	**372120720**	$200.00	**372120730**	$416.00	19.0mm	19.0mm	8.491mm	8.391mm	1
M9.0 X 1.00										
Taperlock Plug 6H	**302121010**	**302121020**	$113.00	**302121030**	$242.00	12.7mm	7.9mm	8.350mm	8.500mm	1
Reversible Plug 6H	**312121010**	**312121020**	$140.00	**312121030**	$301.50	28.6mm	28.6mm	8.350mm	8.500mm	4W
Ring 6g	**362121010**	**362121020**	$293.00	**362121030**	$586.00	8.7mm	8.7mm	8.324mm	8.212mm	2T
Set Plug 6g	**372121010**	**372121020**	$160.00	**372121030**	$336.00	19.0mm	19.0mm	8.324mm	8.212mm	1
M9.0 X 1.25										
Taperlock Plug 6H	**302122010**	**302122020**	$113.00	**302122030**	$242.00	12.7mm	7.9mm	8.188mm	8.348mm	1
Reversible Plug 6H	**312122010**	**312122020**	$140.00	**312122030**	$301.50	28.6mm	28.6mm	8.188mm	8.348mm	4W
Ring 6g	**362122010**	**362122020**	$293.00	**362122030**	$586.00	8.7mm	8.7mm	8.160mm	8.042mm	2T
Set Plug 6g	**372122010**	**372122020**	$160.00	**372122030**	$336.00	19.0mm	19.0mm	8.160mm	8.042mm	1
M10.0 X .75										
Taperlock Plug 6H	**302123510**	**302123520**	$59.00	**302123530**	$134.00	19.0mm	9.5mm	9.513mm	9.645mm	2
Reversible Plug 6H	**312123510**	**312123520**	$84.00	**312123530**	$189.50	28.6mm	28.6mm	9.513mm	9.645mm	4W
Ring 6g	**362123510**	**362123520**	$160.00	**362123530**	$320.00	11.1mm	11.1mm	9.491mm	9.391mm	3T
Set Plug 6g	**372123510**	**372123520**	$129.00	**372123530**	$274.00	25.4mm	25.4mm	9.491mm	9.391mm	2
M10.0 X 1.00										
Taperlock Plug 6H	**302124010**	**302124020**	$59.00	**302124030**	$134.00	19.0mm	9.5mm	9.350mm	9.500mm	2
Reversible Plug 6H	**312124010**	**312124020**	$84.00	**312124030**	$189.50	28.6mm	28.6mm	9.350mm	9.500mm	4W
Ring 6g	**362124010**	**362124020**	$160.00	**362124030**	$320.00	11.1mm	11.1mm	9.324mm	9.212mm	3T
Set Plug 6g	**372124010**	**372124020**	$129.00	**372124030**	$274.00	25.4mm	25.4mm	9.324mm	9.212mm	2
M10.0 X 1.25										
Taperlock Plug 6H	**302124510**	**302124520**	$51.00	**302124530**	$118.00	19.0mm	9.5mm	9.188mm	9.348mm	2
Reversible Plug 6H	**312124510**	**312124520**	$66.00	**312124530**	$153.50	28.6mm	28.6mm	9.188mm	9.348mm	4W
Ring 6g	**362124510**	**362124520**	$152.00	**362124530**	$304.00	11.1mm	11.1mm	9.160mm	9.042mm	3T
Set Plug 6g	**372124510**	**372124520**	$119.00	**372124530**	$254.00	25.4mm	25.4mm	9.160mm	9.042mm	2
M10.0 X 1.50										
Taperlock Plug 6H	**302125510**	**302125520**	$51.00	**302125530**	$118.00	19.0mm	9.5mm	9.026mm	9.206mm	2
Reversible Plug 6H	**312125510**	**312125520**	$66.00	**312125530**	$153.50	28.6mm	28.6mm	9.026mm	9.206mm	4W
Ring 6g	**362125510**	**362125520**	$152.00	**362125530**	$304.00	11.1mm	11.1mm	8.994mm	8.862mm	3T
Set Plug 6g	**372125510**	**372125520**	$119.00	**372125530**	$254.00	25.4mm	25.4mm	8.994mm	8.862mm	2
M11.0 X .75										
Taperlock Plug 6H	**302126010**	**302126020**	$148.00	**302126030**	$312.00	19.0mm	9.5mm	10.513mm	10.645mm	2
Reversible Plug 6H	**312126010**	**312126020**	$184.00	**312126030**	$393.00	31.8mm	31.8mm	10.513mm	10.645mm	5W
Ring 6g	**362126010**	**362126020**	$396.00	**362126030**	$792.00	11.1mm	11.1mm	10.491mm	10.391mm	3T
Set Plug 6g	**372126010**	**372126020**	$215.00	**372126030**	$446.00	25.4mm	25.4mm	10.491mm	10.391mm	2

Standard Thread Gages

METRIC	Part No. Go Member	Part No. NoGo Member	Price	Part No. Go/NoGo Set	Price	Gage length Go (Min)	Gage length NoGo (Min)	Pitch Diameters Go	Pitch Diameters NoGo	Handle No.
M11.0 X 1.00										
Taperlock Plug 6H	**302126510**	**302126520**	$118.00	**302126530**	$252.00	19.0mm	9.5mm	10.350mm	10.500mm	2
Reversible Plug 6H	**312126510**	**312126520**	$148.00	**312126530**	$321.00	31.8mm	31.8mm	10.350mm	10.500mm	5W
Ring 6g	**362126510**	**362126520**	$318.00	**362126530**	$636.00	11.1mm	11.1mm	10.324mm	10.212mm	3T
Set Plug 6g	**372126510**	**372126520**	$169.00	**372126530**	$354.00	25.4mm	25.4mm	10.324mm	10.212mm	2
M11.0 X 1.50										
Taperlock Plug 6H	**302127010**	**302127020**	$113.00	**302127030**	$242.00	19.0mm	9.5mm	10.026mm	10.206mm	2
Reversible Plug 6H	**312127010**	**312127020**	$140.00	**312127030**	$305.00	31.8mm	31.8mm	10.026mm	10.206mm	5W
Ring 6g	**362127010**	**362127020**	$293.00	**362127030**	$586.00	11.1mm	11.1mm	9.994mm	9.862mm	3T
Set Plug 6g	**372127010**	**372127020**	$160.00	**372127030**	$336.00	25.4mm	25.4mm	9.994mm	9.862mm	2
M12.0 X 1.00										
Taperlock Plug 6H	**302128010**	**302128020**	$62.00	**302128030**	$140.00	19.0mm	9.5mm	11.350mm	11.510mm	2
Reversible Plug 6H	**312128010**	**312128020**	$86.00	**312128030**	$197.00	34.9mm	34.9mm	11.350mm	11.510mm	5W
Ring 6g	**362128010**	**362128020**	$179.00	**362128030**	$358.00	11.1mm	11.1mm	11.324mm	11.206mm	3T
Set Plug 6g	**372128010**	**372128020**	$131.00	**372128030**	$278.00	25.4mm	25.4mm	11.324mm	11.206mm	2
M12.0 X 1.25										
Taperlock Plug 6H	**302128510**	**302128520**	$53.00	**302128530**	$122.00	19.0mm	9.5mm	11.188mm	11.368mm	2
Reversible Plug 6H	**312128510**	**312128520**	$69.00	**312128530**	$163.00	34.9mm	34.9mm	11.188mm	11.368mm	5W
Ring 6g	**362128510**	**362128520**	$163.00	**362128530**	$326.00	11.1mm	11.1mm	11.160mm	11.028mm	3T
Set Plug 6g	**372128510**	**372128520**	$125.00	**372128530**	$266.00	25.4mm	25.4mm	11.160mm	11.028mm	2
M12.0 X 1.50										
Taperlock Plug 6H	**302129510**	**302129520**	$53.00	**302129530**	$122.00	19.0mm	9.5mm	11.026mm	11.216mm	2
Reversible Plug 6H	**312129510**	**312129520**	$69.00	**312129530**	$163.00	34.9mm	34.9mm	11.026mm	11.216mm	5W
Ring 6g	**362129510**	**362129520**	$163.00	**362129530**	$326.00	11.1mm	11.1mm	10.994mm	10.854mm	3T
Set Plug 6g	**372129510**	**372129520**	$125.00	**372129530**	$266.00	25.4mm	25.4mm	10.994mm	10.854mm	2
M12.0 X 1.75										
Taperlock Plug 6H	**302130510**	**302130520**	$53.00	**302130530**	$122.00	19.0mm	9.5mm	10.863mm	11.063mm	2
Reversible Plug 6H	**312130510**	**312130520**	$69.00	**312130530**	$163.00	34.9mm	34.9mm	10.863mm	11.063mm	5W
Ring 6g	**362130510**	**362130520**	$163.00	**362130530**	$326.00	11.1mm	11.1mm	10.829mm	10.679mm	3T
Set Plug 6g	**372130510**	**372130520**	$125.00	**372130530**	$266.00	25.4mm	25.4mm	10.829mm	10.679mm	2
M14.0 X 1.00										
Taperlock Plug 6H	**302131010**	**302131020**	$125.00	**302131030**	$266.00	22.2mm	12.7mm	13.350mm	13.510mm	3
Reversible Plug 6H	**312131010**	**312131020**	$153.00	**312131030**	$337.00	38.1mm	34.9mm	13.350mm	13.510mm	6W
Ring 6g	**362131010**	**362131020**	$318.00	**362131030**	$636.00	14.3mm	14.3mm	13.324mm	13.206mm	4T
Set Plug 6g	**372131010**	**372131020**	$178.00	**372131030**	$372.00	31.8mm	31.8mm	13.324mm	13.206mm	3
M14.0 X 1.25										
Taperlock Plug 6H	**302131510**	**302131520**	$113.00	**302131530**	$242.00	22.2mm	12.7mm	13.188mm	13.368mm	3
Reversible Plug 6H	**312131510**	**312131520**	$140.00	**312131530**	$311.00	38.1mm	34.9mm	13.188mm	13.368mm	6W
Ring 6g	**362131510**	**362131520**	$305.00	**362131530**	$610.00	14.3mm	14.3mm	13.160mm	13.028mm	4T
Set Plug 6g	**372131510**	**372131520**	$160.00	**372131530**	$336.00	31.8mm	31.8mm	13.160mm	13.028mm	3
M14.0 X 1.50										
Taperlock Plug 6H	**302132010**	**302132020**	$59.00	**302132030**	$134.00	22.2mm	12.7mm	13.026mm	13.216mm	3
Reversible Plug 6H	**312132010**	**312132020**	$77.00	**312132030**	$185.00	38.1mm	34.9mm	13.026mm	13.216mm	6W
Ring 6g	**362132010**	**362132020**	$169.00	**362132030**	$338.00	14.3mm	14.3mm	12.994mm	12.854mm	4T
Set Plug 6g	**372132010**	**372132020**	$140.00	**372132030**	$296.00	31.8mm	31.8mm	12.994mm	12.854mm	3
M14.0 X 2.00										
Taperlock Plug 6H	**302133010**	**302133020**	$59.00	**302133030**	$134.00	22.2mm	12.7mm	12.701mm	12.913mm	3
Reversible Plug 6H	**312133010**	**312133020**	$77.00	**312133030**	$185.00	38.1mm	34.9mm	12.701mm	12.913mm	6W
Ring 6g	**362133010**	**362133020**	$169.00	**362133030**	$338.00	14.3mm	14.3mm	12.663mm	12.503mm	4T
Set Plug 6g	**372133010**	**372133020**	$140.00	**372133030**	$296.00	31.8mm	31.8mm	12.663mm	12.503mm	3
M15.0 X 1.00										
Taperlock Plug 6H	**302134510**	**302134520**	$68.00	**302134530**	$152.00	22.2mm	12.7mm	14.350mm	14.510mm	3
Reversible Plug 6H	**312134510**	**312134520**	$87.00	**312134530**	$205.00	38.1mm	34.9mm	14.350mm	14.510mm	6W
Ring 6g	**362134510**	**362134520**	$178.00	**362134530**	$356.00	14.3mm	14.3mm	14.324mm	14.206mm	4T
Set Plug 6g	**372134510**	**372134520**	$142.00	**372134530**	$300.00	31.8mm	31.8mm	14.324mm	14.206mm	3

Standard Thread Gages

METRIC	Part No. Go Member	Part No. NoGo Member	Price	Part No. Go/NoGo Set	Price	Gage length Go (Min)	Gage length NoGo (Min)	Pitch Diameters Go	Pitch Diameters NoGo	Handle No.
M15.0 X 1.50										
Taperlock Plug 6H	**302135510**	**302135520**	$68.00	**302135530**	$152.00	22.2mm	12.7mm	14.026mm	14.216mm	3
Reversible Plug 6H	**312135510**	**312135520**	$87.00	**312135530**	$205.00	38.1mm	34.9mm	14.026mm	14.216mm	6W
Ring 6g	**362135510**	**362135520**	$178.00	**362135530**	$356.00	14.3mm	14.3mm	13.994mm	13.854mm	4T
Set Plug 6g	**372135510**	**372135520**	$142.00	**372135530**	$300.00	31.8mm	31.8mm	13.994mm	13.854mm	3
M16.0 X 1.00										
Taperlock Plug 6H	**302136010**	**302136020**	$142.00	**302136030**	$300.00	22.2mm	12.7mm	15.350mm	15.510mm	3
Reversible Plug 6H	**312136010**	**312136020**	$178.00	**312136030**	$387.00	38.1mm	34.9mm	15.350mm	15.510mm	6W
Ring 6g	**362136010**	**362136020**	$348.00	**362136030**	$696.00	14.3mm	14.3mm	15.324mm	15.206mm	4T
Set Plug 6g	**372136010**	**372136020**	$205.00	**372136030**	$426.00	31.8mm	31.8mm	15.324mm	15.206mm	3
M16.0 X 1.50										
Taperlock Plug 6H	**302137010**	**302137020**	$60.00	**302137030**	$136.00	22.2mm	12.7mm	15.026mm	15.216mm	3
Reversible Plug 6H	**312137010**	**312137020**	$81.00	**312137030**	$193.00	38.1mm	34.9mm	15.026mm	15.216mm	6W
Ring 6g	**362137010**	**362137020**	$169.00	**362137030**	$338.00	14.3mm	14.3mm	14.994mm	14.854mm	4T
Set Plug 6g	**372137010**	**372137020**	$140.00	**372137030**	$296.00	31.8mm	31.8mm	14.994mm	14.854mm	3
M16.0 X 2.00										
Taperlock Plug 6H	**302138010**	**302138020**	$60.00	**302138030**	$136.00	22.2mm	12.7mm	14.701mm	14.913mm	3
Reversible Plug 6H	**312138010**	**312138020**	$81.00	**312138030**	$193.00	38.1mm	34.9mm	14.701mm	14.913mm	6W
Ring 6g	**362138010**	**362138020**	$169.00	**362138030**	$338.00	14.3mm	14.3mm	14.663mm	14.503mm	4T
Set Plug 6g	**372138010**	**372138020**	$140.00	**372138030**	$296.00	31.8mm	31.8mm	14.663mm	14.503mm	3
M17.0 X 1.00										
Taperlock Plug 6H	**302139510**	**302139520**	$66.00	**302139530**	$148.00	22.2mm	12.7mm	16.350mm	16.510mm	3
Reversible Plug 6H	**312139510**	**312139520**	$101.00	**312139530**	$235.00	44.5mm	34.9mm	16.350mm	16.510mm	7W
Ring 6g	**362139510**	**362139520**	$252.00	**362139530**	$504.00	14.3mm	14.3mm	16.324mm	16.206mm	4T
Set Plug 6g	**372139510**	**372139520**	$160.00	**372139530**	$336.00	31.8mm	31.8mm	16.324mm	16.206mm	3
M17.0 X 1.50										
Taperlock Plug 6H	**302140510**	**302140520**	$66.00	**302140530**	$148.00	22.2mm	12.7mm	16.026mm	16.216mm	3
Reversible Plug 6H	**312140510**	**312140520**	$101.00	**312140530**	$235.00	44.5mm	34.9mm	16.026mm	16.216mm	7W
Ring 6g	**362140510**	**362140520**	$252.00	**362140530**	$504.00	14.3mm	14.3mm	15.994mm	15.854mm	4T
Set Plug 6g	**372140510**	**372140520**	$160.00	**372140530**	$336.00	31.8mm	31.8mm	15.994mm	15.854mm	3
M18.0 X 1.00										
Taperlock Plug 6H	**302141010**	**302141020**	$142.00	**302141030**	$300.00	22.2mm	12.7mm	17.350mm	17.510mm	3
Reversible Plug 6H	**312141010**	**312141020**	$178.00	**312141030**	$389.00	44.5mm	34.9mm	17.350mm	17.510mm	7W
Ring 6g	**362141010**	**362141020**	$348.00	**362141030**	$696.00	14.3mm	14.3mm	17.324mm	17.206mm	4T
Set Plug 6g	**372141010**	**372141020**	$203.00	**372141030**	$422.00	31.8mm	31.8mm	17.324mm	17.206mm	3
M18.0 X 1.50										
Taperlock Plug 6H	**302142010**	**302142020**	$68.00	**302142030**	$152.00	22.2mm	12.7mm	17.026mm	17.216mm	3
Reversible Plug 6H	**312142010**	**312142020**	$92.00	**312142030**	$217.00	44.5mm	34.9mm	17.026mm	17.216mm	7W
Ring 6g	**362142010**	**362142020**	$240.00	**362142030**	$480.00	14.3mm	14.3mm	16.994mm	16.854mm	4T
Set Plug 6g	**372142010**	**372142020**	$160.00	**372142030**	$336.00	31.8mm	31.8mm	16.994mm	16.854mm	3
M18.0 X 2.00										
Taperlock Plug 6H	**302142510**	**302142520**	$117.00	**302142530**	$250.00	22.2mm	12.7mm	16.701mm	16.913mm	3
Reversible Plug 6H	**312142510**	**312142520**	$145.00	**312142530**	$323.00	44.5mm	34.9mm	16.701mm	16.913mm	7W
Ring 6g	**362142510**	**362142520**	$318.00	**362142530**	$636.00	14.3mm	14.3mm	16.663mm	16.503mm	4T
Set Plug 6g	**372142510**	**372142520**	$168.00	**372142530**	$352.00	31.8mm	31.8mm	16.663mm	16.503mm	3
M18.0 X 2.50										
Taperlock Plug 6H	**302143010**	**302143020**	$68.00	**302143030**	$152.00	22.2mm	12.7mm	16.376mm	16.600mm	3
Reversible Plug 6H	**312143010**	**312143020**	$92.00	**312143030**	$217.00	44.5mm	34.9mm	16.376mm	16.600mm	7W
Ring 6g	**362143010**	**362143020**	$240.00	**362143030**	$480.00	19.0mm	14.3mm	16.334mm	16.164mm	4T
Set Plug 6g	**372143010**	**372143020**	$160.00	**372143030**	$336.00	47.6mm	31.8mm	16.334mm	16.164mm	3
M20.0 X 1.00										
Taperlock Plug 6H	**302144510**	**302144520**	$92.00	**302144530**	$200.00	22.2mm	12.7mm	19.350mm	19.510mm	3
Ring 6g	**362144510**	**362144520**	$312.00	**362144530**	$624.00	14.3mm	14.3mm	19.324mm	19.206mm	4T
Set Plug 6g	**372144510**	**372144520**	$195.00	**372144530**	$406.00	31.8mm	31.8mm	19.324mm	19.206mm	3

Standard Thread Gages

METRIC	Part No. Go Member	Part No. NoGo Member	Price	Part No. Go/NoGo Set	Price	Gage length Go (Min)	Gage length NoGo (Min)	Pitch Diameters Go	Pitch Diameters NoGo	Handle No.
M20.0 X 1.50										
Taperlock Plug 6H	**302145510**	**302145520**	$77.00	**302145530**	$170.00	22.2mm	12.7mm	19.026mm	19.216mm	3
Ring 6g	**362145510**	**362145520**	$294.00	**362145530**	$588.00	14.3mm	14.3mm	18.994mm	18.854mm	4T
Set Plug 6g	**372145510**	**372145520**	$169.00	**372145530**	$354.00	31.8mm	31.8mm	18.994mm	18.854mm	3
M20.0 X 2.00										
Taperlock Plug 6H	**302146010**	**302146020**	$119.00	**302146030**	$254.00	22.2mm	12.7mm	18.701mm	18.913mm	3
Ring 6g	**362146010**	**362146020**	$326.00	**362146030**	$652.00	14.3mm	14.3mm	18.663mm	18.503mm	4T
Set Plug 6g	**372146010**	**372146020**	$172.00	**372146030**	$360.00	31.8mm	31.8mm	18.663mm	18.503mm	3
M20.0 X 2.50										
Taperlock Plug 6H	**302146510**	**302146520**	$77.00	**302146530**	$170.00	22.2mm	12.7mm	18.376mm	18.600mm	3
Ring 6g	**362146510**	**362146520**	$294.00	**362146530**	$588.00	19.0mm	14.3mm	18.334mm	18.164mm	4T
Set Plug 6g	**372146510**	**372146520**	$169.00	**372146530**	$354.00	47.6mm	31.8mm	18.334mm	18.164mm	3
M22.0 X 1.00										
Taperlock Plug 6H	**302147010**	**302147020**	$152.00	**302147030**	$321.25	25.4mm	15.9mm	21.350mm	21.510mm	4
Ring 6g	**362147010**	**362147020**	$360.00	**362147030**	$720.00	17.5mm	17.5mm	21.324mm	21.206mm	5T
Set Plug 6g	**372147010**	**372147020**	$224.00	**372147030**	$465.25	38.1mm	38.1mm	21.324mm	21.206mm	4
M22.0 X 1.50										
Taperlock Plug 6H	**302148010**	**302148020**	$79.00	**302148030**	$175.25	25.4mm	15.9mm	21.026mm	21.216mm	4
Ring 6g	**362148010**	**362148020**	$302.00	**362148030**	$604.00	17.5mm	17.5mm	20.994mm	20.854mm	5T
Set Plug 6g	**372148010**	**372148020**	$169.00	**372148030**	$355.25	38.1mm	38.1mm	20.994mm	20.854mm	4
M22.0 X 2.00										
Taperlock Plug 6H	**302148510**	**302148520**	$119.00	**302148530**	$255.25	25.4mm	15.9mm	20.701mm	20.913mm	4
Ring 6g	**362148510**	**362148520**	$326.00	**362148530**	$652.00	17.5mm	17.5mm	20.663mm	20.503mm	5T
Set Plug 6g	**372148510**	**372148520**	$172.00	**372148530**	$361.25	38.1mm	38.1mm	20.663mm	20.503mm	4
M22.0 X 2.50										
Taperlock Plug 6H	**302149010**	**302149020**	$79.00	**302149030**	$175.25	25.4mm	15.9mm	20.376mm	20.600mm	4
Ring 6g	**362149010**	**362149020**	$302.00	**362149030**	$604.00	23.8mm	17.5mm	20.334mm	20.164mm	5T
Set Plug 6g	**372149010**	**372149020**	$169.00	**372149030**	$355.25	54.0mm	38.1mm	20.334mm	20.164mm	4
M24.0 X 1.00										
Taperlock Plug 6H	**302149510**	**302149520**	$153.00	**302149530**	$323.25	25.4mm	15.9mm	23.350mm	23.520mm	4
Ring 6g	**362149510**	**362149520**	$373.00	**362149530**	$746.00	17.5mm	17.5mm	23.324mm	23.199mm	5T
Set Plug 6g	**372149510**	**372149520**	$225.00	**372149530**	$467.25	38.1mm	38.1mm	23.324mm	23.199mm	4
M24.0 X 1.50										
Taperlock Plug 6H	**302150010**	**302150020**	$132.00	**302150030**	$281.25	25.4mm	15.9mm	23.026mm	23.226mm	4
Ring 6g	**362150010**	**362150020**	$350.00	**362150030**	$700.00	17.5mm	17.5mm	22.994mm	22.844mm	5T
Set Plug 6g	**372150010**	**372150020**	$187.00	**372150030**	$391.25	38.1mm	38.1mm	22.994mm	22.844mm	4
M24.0 X 2.00										
Taperlock Plug 6H	**302150510**	**302150520**	$84.00	**302150530**	$185.25	25.4mm	15.9mm	22.701mm	22.925mm	4
Ring 6g	**362150510**	**362150520**	$342.00	**362150530**	$684.00	17.5mm	17.5mm	22.663mm	22.493mm	5T
Set Plug 6g	**372150510**	**372150520**	$184.00	**372150530**	$385.25	38.1mm	38.1mm	22.663mm	22.493mm	4
M24.0 X 3.00										
Taperlock Plug 6H	**302151510**	**302151520**	$84.00	**302151530**	$185.25	25.4mm	15.9mm	22.051mm	22.316mm	4
Ring 6g	**362151510**	**362151520**	$342.00	**362151530**	$684.00	23.8mm	17.5mm	22.003mm	21.803mm	5T
Set Plug 6g	**372151510**	**372151520**	$184.00	**372151530**	$385.25	54.00mm	38.1mm	22.003mm	21.803mm	4
M25.0 X 1.00										
Taperlock Plug 6H	**302152010**	**302152020**	$153.00	**302152030**	$323.25	25.4mm	15.9mm	24.350mm	24.520mm	4
Ring 6g	**362152010**	**362152020**	$374.00	**362152030**	$748.00	17.5mm	17.5mm	24.324mm	24.199mm	5T
Set Plug 6g	**372152010**	**372152020**	$225.00	**372152030**	$467.25	38.1mm	38.1mm	24.324mm	24.199mm	4
M25.0 X 1.50										
Taperlock Plug 6H	**302153010**	**302153020**	$133.00	**302153030**	$283.25	25.4mm	15.9mm	24.026mm	24.226mm	4
Ring 6g	**362153010**	**362153020**	$350.00	**362153030**	$700.00	17.5mm	17.5mm	23.994mm	23.844mm	5T
Set Plug 6g	**372153010**	**372153020**	$187.00	**372153030**	$391.25	38.1mm	38.1mm	23.994mm	23.844mm	4
M25.0 X 2.00										
Taperlock Plug 6H	**302154010**	**302154020**	$132.00	**302154030**	$281.25	25.4mm	15.9mm	23.701mm	23.925mm	4
Ring 6g	**362154010**	**362154020**	$350.00	**362154030**	$700.00	17.5mm	17.5mm	23.663mm	23.493mm	5T
Set Plug 6g	**372154010**	**372154020**	$187.00	**372154030**	$391.25	38.1mm	38.1mm	23.663mm	23.493mm	4

Standard Thread Gages

METRIC	Part No. Go Member	Part No. NoGo Member	Price	Part No. Go/NoGo Set	Price	Gage length Go (Min)	Gage length NoGo (Min)	Pitch Diameters Go	Pitch Diameters NoGo	Handle No.
M26.0 X 1.00										
Taperlock Plug 6H	**302155510**	**302155520**	$157.00	**302155530**	$331.25	25.4mm	15.9mm	25.350mm	25.520mm	4
Ring 6g	**362155510**	**362155520**	$396.00	**362155530**	$792.00	17.5mm	17.5mm	25.324mm	25.199mm	5T
Set Plug 6g	**372155510**	**372155520**	$229.00	**372155530**	$475.25	38.1mm	38.1mm	25.324mm	25.199mm	4
M26.0 X 1.50										
Taperlock Plug 6H	**302156510**	**302156520**	$141.00	**302156530**	$299.25	25.4mm	15.9mm	25.026mm	25.226mm	4
Ring 6g	**362156510**	**362156520**	$334.00	**362156530**	$668.00	17.5mm	17.5mm	24.994mm	24.844mm	5T
Set Plug 6g	**372156510**	**372156520**	$200.00	**372156530**	$417.25	38.1mm	38.1mm	24.994mm	24.844mm	4
M27.0 X 1.00										
Taperlock Plug 6H	**302157010**	**302157020**	$157.00	**302157030**	$331.25	25.4mm	15.9mm	26.350mm	26.520mm	4
Ring 6g	**362157010**	**362157020**	$396.00	**362157030**	$792.00	17.5mm	17.5mm	26.324mm	26.199mm	5T
Set Plug 6g	**372157010**	**372157020**	$229.00	**372157030**	$475.25	38.1mm	38.1mm	26.324mm	26.199mm	4
M27.0 X 1.50										
Taperlock Plug 6H	**302157510**	**302157520**	$141.00	**302157530**	$299.25	25.4mm	15.9mm	26.026mm	26.226mm	4
Ring 6g	**362157510**	**362157520**	$334.00	**362157530**	$668.00	17.5mm	17.5mm	25.994mm	25.844mm	5T
Set Plug 6g	**372157510**	**372157520**	$200.00	**372157530**	$417.25	38.1mm	38.1mm	25.994mm	25.844mm	4
M27.0 X 2.00										
Taperlock Plug 6H	**302158010**	**302158020**	$116.00	**302158030**	$249.25	25.4mm	15.9mm	25.701mm	25.925mm	4
Ring 6g	**362158010**	**362158020**	$334.00	**362158030**	$668.00	17.5mm	17.5mm	25.663mm	25.493mm	5T
Set Plug 6g	**372158010**	**372158020**	$222.00	**372158030**	$461.25	38.1mm	38.1mm	25.663mm	25.493mm	4
M27.0 X 3.00										
Taperlock Plug 6H	**302159010**	**302159020**	$116.00	**302159030**	$249.25	25.4mm	15.9mm	25.051mm	25.316mm	4
Ring 6g	**362159010**	**362159020**	$334.00	**362159030**	$668.00	23.8mm	17.5mm	25.003mm	24.803mm	5T
Set Plug 6g	**372159010**	**372159020**	$222.00	**372159030**	$461.25	54.0mm	38.1mm	25.003mm	24.803mm	4
M28.0 X 1.00										
Taperlock Plug 6H	**302160510**	**302160520**	$157.00	**302160530**	$331.25	25.4mm	15.9mm	27.350mm	27.520mm	4
Ring 6g	**362160510**	**362160520**	$396.00	**362160530**	$792.00	17.5mm	17.5mm	27.324mm	27.199mm	5T
Set Plug 6g	**372160510**	**372160520**	$245.00	**372160530**	$507.25	38.1mm	38.1mm	27.324mm	27.199mm	4
M28.0 X 1.50										
Taperlock Plug 6H	**302161510**	**302161520**	$142.00	**302161530**	$301.25	25.4mm	15.9mm	27.026mm	27.226mm	4
Ring 6g	**362161510**	**362161520**	$334.00	**362161530**	$668.00	17.5mm	17.5mm	26.994mm	26.844mm	5T
Set Plug 6g	**372161510**	**372161520**	$230.00	**372161530**	$477.25	38.1mm	38.1mm	26.994mm	26.844mm	4
M28.0 X 2.00										
Taperlock Plug 6H	**302162510**	**302162520**	$142.00	**302162530**	$301.25	25.4mm	15.9mm	26.701mm	26.925mm	4
Ring 6g	**362162510**	**362162520**	$334.00	**362162530**	$668.00	17.5mm	17.5mm	26.663mm	26.493mm	5T
Set Plug 6g	**372162510**	**372162520**	$230.00	**372162530**	$477.25	38.1mm	38.1mm	26.663mm	26.493mm	4
M30.0 X 1.00										
Taperlock Plug 6H	**302163010**	**302163020**	$161.00	**302163030**	$340.50	25.4mm	19.0mm	29.350mm	29.520mm	5
Ring 6g	**362163010**	**362163020**	$397.00	**362163030**	$794.00	19.0mm	19.0mm	29.324mm	29.199mm	6T
Set Plug 6g	**372163010**	**372163020**	$236.00	**372163030**	$490.50	41.3mm	41.3mm	29.324mm	29.199mm	5
M30.0 X 1.50										
Taperlock Plug 6H	**302164010**	**302164020**	$141.00	**302164030**	$300.50	25.4mm	19.0mm	29.026mm	29.226mm	5
Ring 6g	**362164010**	**362164020**	$357.00	**362164030**	$714.00	19.0mm	19.0mm	28.994mm	28.844mm	6T
Set Plug 6g	**372164010**	**372164020**	$222.00	**372164030**	$462.50	41.3mm	41.3mm	28.994mm	28.844mm	5
M30.0 X 2.00										
Taperlock Plug 6H	**302165010**	**302165020**	$141.00	**302165030**	$300.50	25.4mm	19.0mm	28.701mm	28.925mm	5
Ring 6g	**362165010**	**362165020**	$357.00	**362165030**	$714.00	19.0mm	19.0mm	28.663mm	28.493mm	6T
Set Plug 6g	**372165010**	**372165020**	$222.00	**372165030**	$462.50	41.3mm	41.3mm	28.663mm	28.493mm	5
M30.0 X 3.50										
Taperlock Plug 6H	**302166010**	**302166020**	$175.00	**302166030**	$368.50	31.8mm	19.0mm	27.727mm	28.007mm	5
Ring 6g	**362166010**	**362166020**	$427.00	**362166030**	$854.00	28.6mm	19.0mm	27.674mm	27.462mm	6T
Set Plug 6g	**372166010**	**372166020**	$255.00	**372166030**	$528.50	60.3mm	41.3mm	27.674mm	27.462mm	5
M32.0 X 1.50										
Taperlock Plug 6H	**302167510**	**302167520**	$151.00	**302167530**	$320.50	25.4mm	19.0mm	31.026mm	31.226mm	5
Ring 6g	**362167510**	**362167520**	$374.00	**362167530**	$748.00	19.0mm	19.0mm	30.994mm	30.844mm	6T
Set Plug 6g	**372167510**	**372167520**	$230.00	**372167530**	$478.50	41.3mm	41.3mm	30.994mm	30.844mm	5

Standard Thread Gages

METRIC	Part No. Go Member	Part No. NoGo Member	Price	Part No. Go/NoGo Set	Price	Gage length Go (Min)	Gage length NoGo (Min)	Pitch Diameters Go	Pitch Diameters NoGo	Handle No.
M32.0 X 2.00										
Taperlock Plug 6H	**302168510**	**302168520**	$151.00	**302168530**	$320.50	25.4mm	19.0mm	30.701mm	30.925mm	5
Ring 6g	**362168510**	**362168520**	$374.00	**362168530**	$748.00	19.0mm	19.0mm	30.663mm	30.493mm	6T
Set Plug 6g	**372168510**	**372168520**	$230.00	**372168530**	$478.50	41.3mm	41.3mm	30.663mm	30.493mm	5
M33.0 X 1.50										
Taperlock Plug 6H	**302169010**	**302169020**	$151.00	**302169030**	$320.50	25.4mm	19.0mm	32.026mm	32.226mm	5
Ring 6g	**362169010**	**362169020**	$374.00	**362169030**	$748.00	19.0mm	19.0mm	31.994mm	31.844mm	6T
Set Plug 6g	**372169010**	**372169020**	$230.00	**372169030**	$478.50	41.3mm	41.3mm	31.994mm	31.844mm	5
M33.0 X 2.00										
Taperlock Plug 6H	**302170010**	**302170020**	$148.00	**302170030**	$314.50	25.4mm	19.0mm	31.701mm	31.925mm	5
Ring 6g	**362170010**	**362170020**	$374.00	**362170030**	$748.00	19.0mm	19.0mm	31.663mm	31.493mm	6T
Set Plug 6g	**372170010**	**372170020**	$240.00	**372170030**	$498.50	41.3mm	41.3mm	31.663mm	31.493mm	5
M33.0 X 3.50										
Taperlock Plug 6H	**302171010**	**302171020**	$148.00	**302171030**	$314.50	31.8mm	19.0mm	30.727mm	31.007mm	5
Ring 6g	**362171010**	**362171020**	$406.00	**362171030**	$812.00	28.6mm	19.0mm	30.674mm	30.462mm	6T
Set Plug 6g	**372171010**	**372171020**	$260.00	**372171030**	$538.50	60.3mm	41.3mm	30.674mm	30.462mm	5
M35.0 X 1.50										
Taperlock Plug 6H	**302172510**	**302172520**	$168.00	**302172530**	$354.50	25.4mm	19.0mm	34.026mm	34.226mm	5
Ring 6g	**362172510**	**362172520**	$422.00	**362172530**	$844.00	19.0mm	19.0mm	33.994mm	33.844mm	6T
Set Plug 6g	**372172510**	**372172520**	$265.00	**372172530**	$548.50	41.3mm	41.3mm	33.994mm	33.844mm	5
M36.0 X 1.50										
Taperlock Plug 6H	**302173010**	**302173020**	$168.00	**302173030**	$354.50	25.4mm	19.0mm	35.026mm	35.226mm	5
Ring 6g	**362173010**	**362173020**	$387.00	**362173030**	$774.00	19.0mm	19.0mm	34.994mm	34.844mm	6T
Set Plug 6g	**372173010**	**372173020**	$240.00	**372173030**	$498.50	41.3mm	41.3mm	34.994mm	34.844mm	5
M36.0 X 2.00										
Taperlock Plug 6H	**302174010**	**302174020**	$168.00	**302174030**	$354.50	25.4mm	19.0mm	34.701mm	34.925mm	5
Ring 6g	**362174010**	**362174020**	$387.00	**362174030**	$774.00	19.0mm	19.0mm	34.663mm	34.493mm	6T
Set Plug 6g	**372174010**	**372174020**	$240.00	**372174030**	$498.50	41.3mm	41.3mm	34.663mm	34.493mm	5
M36.0 X 3.00										
Taperlock Plug 6H	**302175010**	**302175020**	$168.00	**302175030**	$354.50	31.8mm	19.0mm	34.051mm	34.316mm	5
Ring 6g	**362175010**	**362175020**	$406.00	**362175030**	$812.00	28.6mm	19.0mm	34.003mm	33.803mm	6T
Set Plug 6g	**372175010**	**372175020**	$245.00	**372175030**	$508.50	60.3mm	41.3mm	34.003mm	33.803mm	5
M36.0 X 4.00										
Taperlock Plug 6H	**302176010**	**302176020**	$191.00	**302176030**	$400.50	31.8mm	19.0mm	33.402mm	33.702mm	5
Ring 6g	**362176010**	**362176020**	$449.00	**362176030**	$898.00	28.6mm	19.0mm	33.342mm	33.118mm	6T
Set Plug 6g	**372176010**	**372176020**	$254.00	**372176030**	$526.50	60.3mm	41.3mm	33.342mm	33.118mm	5
M38.0 X 1.50										
Taperlock Plug 6H	**302177510**	**302177520**	$192.00	**302177530**	$402.50	25.4mm	19.0mm	37.026mm	37.226mm	5
Ring 6g	**362177510**	**362177520**	$451.00	**362177530**	$902.00	19.0mm	19.0mm	36.994mm	36.844mm	6T
Set Plug 6g	**372177510**	**372177520**	$263.00	**372177530**	$544.50	41.3mm	41.3mm	36.994mm	36.844mm	5
M39.0 X 1.50										
Trilock Plug 6H	**302178010**	**302178020**	$209.00	**302178030**	$443.50	31.8mm	22.2mm	38.026mm	38.226mm	5 1/2
Ring 6g	**362178010**	**362178020**	$438.00	**362178030**	$876.00	20.6mm	20.6mm	37.994mm	37.844mm	
Set Plug 6g	**372178010**	**372178020**	$304.00	**372178030**	$633.50	47.6mm	47.6mm	37.994mm	37.844mm	5 1/2
M39.0 X 2.00										
Trilock Plug 6H	**302179010**	**302179020**	$209.00	**302179030**	$443.50	31.8mm	22.2mm	37.701mm	37.925mm	5 1/2
Ring 6g	**362179010**	**362179020**	$438.00	**362179030**	$876.00	20.6mm	20.6mm	37.663mm	37.493mm	
Set Plug 6g	**372179010**	**372179020**	$304.00	**372179030**	$633.50	47.6mm	47.6mm	37.663mm	37.493mm	5 1/2
M39.0 X 3.00										
Trilock Plug 6H	**302180010**	**302180020**	$209.00	**302180030**	$443.50	31.8mm	22.2mm	37.051mm	37.316mm	5 1/2
Ring 6g	**362180010**	**362180020**	$438.00	**362180030**	$876.00	31.8mm	20.6mm	37.003mm	36.803mm	
Set Plug 6g	**372180010**	**372180020**	$304.00	**372180030**	$633.50	73.0mm	47.6mm	37.003mm	36.803mm	5 1/2
M39.0 X 4.00										
Trilock Plug 6H	**302181010**	**302181020**	$240.00	**302181030**	$505.50	47.6mm	22.2mm	36.402mm	36.702mm	5 1/2
Ring 6g	**362181010**	**362181020**	$459.00	**362181030**	$918.00	31.8mm	20.6mm	36.342mm	36.118mm	
Set Plug 6g	**372181010**	**372181020**	$345.00	**372181030**	$715.50	73.0mm	47.6mm	36.342mm	36.118mm	5 1/2

Standard Left Hand Thread Gages

METRIC	Part No. Go Member	Part No. NoGo Member	Price	Part No. Go/NoGo Set	Price	Gage length Go (Min)	Gage length NoGo (Min)	Pitch Diameters Go	Pitch Diameters NoGo	Handle No.
M1.6 X .35 LH										
Taperlock Plug 6H	**302501010**	**302501020**	$148.00	**302501030**	$313.25	6.4mm	4.8mm	1.373mm	1.458mm	000
Ring 6g	**362501010**	**362501020**	$528.00	**362501030**	$1,056.00	2.4mm	2.4mm	1.354mm	1.291mm	1T
Set Plug 6g	**372501010**	**372501020**	$215.00	**372501030**	$447.25	5.6mm	5.6mm	1.354mm	1.291mm	000
M1.8 X .35 LH										
Taperlock Plug 6H	**302502510**	**302502520**	$148.00	**302502530**	$313.25	6.4mm	4.8mm	1.573mm	1.658mm	0000
Ring 6g	**362502510**	**362502520**	$528.00	**362502530**	$1,056.00	2.4mm	2.4mm	1.554mm	1.491mm	1T
Set Plug 6g	**372502510**	**372502520**	$215.00	**372502530**	$447.25	5.6mm	5.6mm	1.554mm	1.491mm	000
M2.0 X .40 LH										
Taperlock Plug 6H	**302504010**	**302504020**	$148.00	**302504030**	$313.25	6.4mm	4.8mm	1.740mm	1.830mm	000
Ring 6g	**362504010**	**362504020**	$374.00	**362504030**	$748.00	2.4mm	2.4mm	1.721mm	1.654mm	1T
Set Plug 6g	**372504010**	**372504020**	$215.00	**372504030**	$447.25	5.6mm	5.6mm	1.721mm	1.654mm	000
M2.2 X .45 LH										
Taperlock Plug 6H	**302505510**	**302505520**	$152.00	**302505530**	$321.25	6.4mm	4.8mm	1.908mm	2.003mm	000
Ring 6g	**362505510**	**362505520**	$409.00	**362505530**	$818.00	2.4mm	2.4mm	1.888mm	1.817mm	1T
Set Plug 6g	**372505510**	**372505520**	$220.00	**372505530**	$457.25	5.6mm	5.6mm	1.888mm	1.817mm	000
M2.50 X .35 LH										
Taperlock Plug 6H	**302506010**	**302506020**	$165.00	**302506030**	$347.25	6.4mm	4.8mm	2.273mm	2.358mm	000
Ring 6g	**362506010**	**362506020**	$485.00	**362506030**	$970.00	4.0mm	4.0mm	2.254mm	2.191mm	1T
Set Plug 6g	**372506010**	**372506020**	$240.00	**372506030**	$497.25	9.5mm	9.5mm	2.254mm	2.191mm	000
M2.5 X .45 LH										
Taperlock Plug 6H	**302507010**	**302507020**	$152.00	**302507030**	$321.25	6.4mm	4.8mm	2.208mm	2.303mm	000
Ring 6g	**362507010**	**362507020**	$409.00	**362507030**	$818.00	4.0mm	4.0mm	2.188mm	2.117mm	1T
Set Plug 6g	**372507010**	**372507020**	$220.00	**372507030**	$457.25	9.5mm	9.5mm	2.188mm	2.117mm	000
M3.0 X .35 LH										
Taperlock Plug 6H	**302508010**	**302508020**	$165.00	**302508030**	$346.00	5.6mm	4.0mm	2.773mm	2.863mm	00
Ring 6g	**362508010**	**362508020**	$485.00	**362508030**	$970.00	4.0mm	4.0mm	2.754mm	2.687mm	1T
Set Plug 6g	**372508010**	**372508020**	$240.00	**372508030**	$496.00	9.5mm	9.5mm	2.754mm	2.687mm	00
M3.0 X .50 LH										
Taperlock Plug 6H	**302508510**	**302508520**	$128.00	**302508530**	$272.00	5.6mm	4.0mm	2.675mm	2.775mm	00
Ring 6g	**362508510**	**362508520**	$374.00	**362508530**	$748.00	4.0mm	4.0mm	2.655mm	2.580mm	1T
Set Plug 6g	**372508510**	**372508520**	$185.00	**372508530**	$386.00	9.5mm	9.5mm	2.655mm	2.580mm	00
M3.5 X .35 LH										
Taperlock Plug 6H	**302509010**	**302509020**	$165.00	**302509030**	$346.00	5.6mm	4.0mm	3.273mm	3.363mm	00
Ring 6g	**362509010**	**362509020**	$495.00	**362509030**	$990.00	4.0mm	4.0mm	3.254mm	3.187mm	1T
Set Plug 6g	**372509010**	**372509020**	$240.00	**372509030**	$496.00	9.5mm	9.5mm	3.254mm	3.187mm	00
M3.5 X .60 LH										
Taperlock Plug 6H	**302510010**	**302510020**	$125.00	**302510030**	$266.00	7.9mm	5.6mm	3.110mm	3.222mm	00
Ring 6g	**362510010**	**362510020**	$326.00	**362510030**	$652.00	4.0mm	4.0mm	3.089mm	3.004mm	1T
Set Plug 6g	**372510010**	**372510020**	$178.00	**372510030**	$372.00	9.5mm	9.5mm	3.089mm	3.004mm	00
M4.0 X .50 LH										
Taperlock Plug 6H	**302511010**	**302511020**	$140.00	**302511030**	$296.00	7.1mm	5.6mm	3.675mm	3.775mm	0
Ring 6g	**362511010**	**362511020**	$389.00	**362511030**	$778.00	4.0mm	4.0mm	3.655mm	3.580mm	1T
Set Plug 6g	**372511010**	**372511020**	$198.00	**372511030**	$412.00	10.3mm	10.3mm	3.655mm	3.580mm	0
M4.0 X .70 LH										
Taperlock Plug 6H	**302511510**	**302511520**	$125.00	**302511530**	$266.00	10.3mm	7.1mm	3.545mm	3.663mm	0
Ring 6g	**362511510**	**362511520**	$325.00	**362511530**	$650.00	4.0mm	4.0mm	3.523mm	3.433mm	1T
Set Plug 6g	**372511510**	**372511520**	$178.00	**372511530**	$372.00	10.3mm	10.3mm	3.523mm	3.433mm	0
M4.5 X .50 LH										
Taperlock Plug 6H	**302512010**	**302512020**	$140.00	**302512030**	$296.00	7.1mm	5.6mm	4.175mm	4.275mm	0
Ring 6g	**362512010**	**362512020**	$398.00	**362512030**	$796.00	4.8mm	4.8mm	4.155mm	4.080mm	1T
Set Plug 6g	**372512010**	**372512020**	$198.00	**372512030**	$412.00	10.3mm	10.3mm	4.155mm	4.080mm	0
M4.5 X .75 LH										
Taperlock Plug 6H	**302513010**	**302513020**	$125.00	**302513030**	$266.00	10.3mm	7.1mm	4.013mm	4.131mm	0
Ring 6g	**362513010**	**362513020**	$325.00	**362513030**	$650.00	4.8mm	4.8mm	3.991mm	3.901mm	1T
Set Plug 6g	**372513010**	**372513020**	$178.00	**372513030**	$372.00	10.3mm	10.3mm	3.991mm	3.901mm	0

"J" Series threads availible upon request

Standard Left Hand Thread Gages

METRIC	Part No. Go Member	Part No. NoGo Member	Price	Part No. Go/NoGo Set	Price	Gage length Go (Min)	Gage length NoGo (Min)	Pitch Diameters Go	Pitch Diameters NoGo	Handle No.
M5.0 X .50 LH										
Taperlock Plug 6H	**302513510**	**302513520**	$140.00	**302513530**	$296.00	7.1mm	5.6mm	4.675mm	4.775mm	0
Ring 6g	**362513510**	**362513520**	$403.00	**362513530**	$806.00	4.8mm	4.8mm	4.655mm	4.580mm	1T
Set Plug 6g	**372513510**	**372513520**	$198.00	**372513530**	$412.00	10.3mm	10.3mm	4.655mm	4.580mm	0
M5.0 X .80 LH										
Taperlock Plug 6H	**302514510**	**302514520**	$110.00	**302514530**	$236.00	10.3mm	7.1mm	4.480mm	4.605mm	0
Ring 6g	**362514510**	**362514520**	$301.00	**362514530**	$602.00	4.8mm	4.8mm	4.456mm	4.361mm	1T
Set Plug 6g	**372514510**	**372514520**	$159.00	**372514530**	$334.00	10.3mm	10.3mm	4.456mm	4.361mm	0
M5.5 X .50 LH										
Taperlock Plug 6H	**302515010**	**302515020**	$140.00	**302515030**	$296.00	7.1mm	5.6mm	5.175mm	5.275mm	0
Ring 6g	**362515010**	**362515020**	$409.00	**362515030**	$818.00	4.8mm	4.8mm	5.155mm	5.080mm	1T
Set Plug 6g	**372515010**	**372515020**	$198.00	**372515030**	$412.00	10.3mm	10.3mm	5.155mm	5.080mm	0
M5.5 X .75 LH										
Taperlock Plug 6H	**302516010**	**302516020**	$128.00	**302516030**	$272.00	10.3mm	7.1mm	5.013mm	5.131mm	0
Ring 6g	**362516010**	**362516020**	$342.00	**362516030**	$684.00	4.8mm	4.8mm	4.991mm	4.901mm	1T
Set Plug 6g	**372516010**	**372516020**	$185.00	**372516030**	$386.00	10.3mm	10.3mm	4.991mm	4.901mm	0
M6.0 X .75 LH										
Taperlock Plug 6H	**302517010**	**302517020**	$128.00	**302517030**	$272.00	12.7mm	7.9mm	5.513mm	5.645mm	1
Ring 6g	**362517010**	**362517020**	$342.00	**362517030**	$684.00	8.7mm	8.7mm	5.491mm	5.391mm	2T
Set Plug 6g	**372517010**	**372517020**	$185.00	**372517030**	$386.00	19.0mm	19.0mm	5.491mm	5.391mm	1
M6.0 X 1.00 LH										
Taperlock Plug 6H	**302517510**	**302517520**	$110.00	**302517530**	$236.00	12.7mm	7.9mm	5.350mm	5.500mm	1
Ring 6g	**362517510**	**362517520**	$280.00	**362517530**	$560.00	8.7mm	8.7mm	5.324mm	5.212mm	2T
Set Plug 6g	**372517510**	**372517520**	$159.00	**372517530**	$334.00	19.0mm	19.0mm	5.324mm	5.212mm	1
M7.0 X .75 LH										
Taperlock Plug 6H	**302518010**	**302518020**	$141.00	**302518030**	$298.00	12.7mm	7.9mm	6.513mm	6.645mm	1
Ring 6g	**362518010**	**362518020**	$359.00	**362518030**	$718.00	8.7mm	8.7mm	6.491mm	6.391mm	2T
Set Plug 6g	**372518010**	**372518020**	$200.00	**372518030**	$416.00	19.0mm	19.0mm	6.491mm	6.391mm	1
M7.0 X 1.00 LH										
Taperlock Plug 6H	**302519010**	**302519020**	$113.00	**302519030**	$242.00	12.7mm	7.9mm	6.350mm	6.500mm	1
Ring 6g	**362519010**	**362519020**	$280.00	**362519030**	$560.00	8.7mm	8.7mm	6.324mm	6.212mm	2T
Set Plug 6g	**372519010**	**372519020**	$161.00	**372519030**	$338.00	19.0mm	19.0mm	6.324mm	6.212mm	1
M8.0 X .75 LH										
Taperlock Plug 6H	**302519510**	**302519520**	$141.00	**302519530**	$298.00	12.7mm	7.9mm	7.513mm	7.645mm	1
Ring 6g	**362519510**	**362519520**	$367.00	**362519530**	$734.00	8.7mm	8.7mm	7.491mm	7.391mm	2T
Set Plug 6g	**372519510**	**372519520**	$200.00	**372519530**	$416.00	19.0mm	19.0mm	7.491mm	7.391mm	1
M8.0 X 1.00 LH										
Taperlock Plug 6H	**302520010**	**302520020**	$113.00	**302520030**	$242.00	12.7mm	7.9mm	7.350mm	7.500mm	1
Ring 6g	**362520010**	**362520020**	$294.00	**362520030**	$588.00	8.7mm	8.7mm	7.324mm	7.212mm	2T
Set Plug 6g	**372520010**	**372520020**	$161.00	**372520030**	$338.00	19.0mm	19.0mm	7.324mm	7.212mm	1
M8.0 X 1.25 LH										
Taperlock Plug 6H	**302520510**	**302520520**	$113.00	**302520530**	$242.00	12.7mm	7.9mm	7.188mm	7.348mm	1
Ring 6g	**362520510**	**362520520**	$294.00	**362520530**	$588.00	8.7mm	8.7mm	7.160mm	7.042mm	2T
Set Plug 6g	**372520510**	**372520520**	$161.00	**372520530**	$338.00	19.0mm	19.0mm	7.160mm	7.042mm	1
M9.0 X .75 LH										
Taperlock Plug 6H	**302520710**	**302520720**	$141.00	**302520730**	$298.00	12.7mm	7.9mm	8.513mm	8.645mm	1
Ring 6g	**362520710**	**362520720**	$367.00	**362520730**	$734.00	8.7mm	8.7mm	8.491mm	8.391mm	2T
Set Plug 6g	**372520710**	**372520720**	$200.00	**372520730**	$416.00	19.0mm	19.0mm	8.491mm	8.391mm	1
M9.0 X 1.00 LH										
Taperlock Plug 6H	**302521010**	**302521020**	$113.00	**302521030**	$242.00	12.7mm	7.9mm	8.350mm	8.500mm	1
Ring 6g	**362521010**	**362521020**	$294.00	**362521030**	$588.00	8.7mm	8.7mm	8.324mm	8.212mm	2T
Set Plug 6g	**372521010**	**372521020**	$161.00	**372521030**	$338.00	19.0mm	19.0mm	8.324mm	8.212mm	1
M9.0 X 1.25 LH										
Taperlock Plug 6H	**302522010**	**302522020**	$113.00	**302522030**	$242.00	12.7mm	7.9mm	8.188mm	8.348mm	1
Ring 6g	**362522010**	**362522020**	$294.00	**362522030**	$588.00	8.7mm	8.7mm	8.160mm	8.042mm	2T
Set Plug 6g	**372522010**	**372522020**	$161.00	**372522030**	$338.00	19.0mm	19.0mm	8.160mm	8.042mm	1

Standard Left Hand Thread Gages

METRIC	Part No. Go Member	Part No. NoGo Member	Price	Part No. Go/NoGo Set	Price	Gage length Go (Min)	Gage length NoGo (Min)	Pitch Diameters Go	Pitch Diameters NoGo	Handle No.
M10.0 X .75 LH										
Taperlock Plug 6H	**302523510**	**302523520**	$148.00	**302523530**	$312.00	19.0mm	9.5mm	9.513mm	9.645mm	2
Ring 6g	**362523510**	**362523520**	$398.00	**362523530**	$796.00	11.1mm	11.1mm	9.491mm	9.391mm	3T
Set Plug 6g	**372523510**	**372523520**	$215.00	**372523530**	$446.00	25.4mm	25.4mm	9.491mm	9.391mm	2
M10.0 X 1.00 LH										
Taperlock Plug 6H	**302524010**	**302524020**	$118.00	**302524030**	$252.00	19.0mm	9.5mm	9.350mm	9.500mm	2
Ring 6g	**362524010**	**362524020**	$310.00	**362524030**	$620.00	11.1mm	11.1mm	9.324mm	9.212mm	3T
Set Plug 6g	**372524010**	**372524020**	$169.00	**372524030**	$354.00	25.4mm	25.4mm	9.324mm	9.212mm	2
M10.0 X 1.25 LH										
Taperlock Plug 6H	**302524510**	**302524520**	$113.00	**302524530**	$242.00	19.0mm	9.5mm	9.188mm	9.348mm	2
Ring 6g	**362524510**	**362524520**	$294.00	**362524530**	$588.00	11.1mm	11.1mm	9.160mm	9.042mm	3T
Set Plug 6g	**372524510**	**372524520**	$161.00	**372524530**	$338.00	25.4mm	25.4mm	9.160mm	9.042mm	2
M10.0 X 1.50 LH										
Taperlock Plug 6H	**302525510**	**302525520**	$113.00	**302525530**	$242.00	19.0mm	9.5mm	9.026mm	9.206mm	2
Ring 6g	**362525510**	**362525520**	$294.00	**362525530**	$588.00	11.1mm	11.1mm	8.994mm	8.862mm	3T
Set Plug 6g	**372525510**	**372525520**	$161.00	**372525530**	$338.00	25.4mm	25.4mm	8.994mm	8.862mm	2
M11.0 X .75 LH										
Taperlock Plug 6H	**302526010**	**302526020**	$148.00	**302526030**	$312.00	19.0mm	9.5mm	10.513mm	10.645mm	2
Ring 6g	**362526010**	**362526020**	$398.00	**362526030**	$796.00	11.1mm	11.1mm	10.491mm	10.391mm	3T
Set Plug 6g	**372526010**	**372526020**	$215.00	**372526030**	$446.00	25.4mm	25.4mm	10.491mm	10.391mm	2
M11.0 X 1.00 LH										
Taperlock Plug 6H	**302526510**	**302526520**	$118.00	**302526530**	$252.00	19.0mm	9.5mm	10.350mm	10.500mm	2
Ring 6g	**362526510**	**362526520**	$318.00	**362526530**	$636.00	11.1mm	11.1mm	10.324mm	10.212mm	3T
Set Plug 6g	**372526510**	**372526520**	$169.00	**372526530**	$354.00	25.4mm	25.4mm	10.324mm	10.212mm	2
M11.0 X 1.50 LH										
Taperlock Plug 6H	**302527010**	**302527020**	$113.00	**302527030**	$242.00	19.0mm	9.5mm	10.026mm	10.206mm	2
Ring 6g	**362527010**	**362527020**	$294.00	**362527030**	$588.00	11.1mm	11.1mm	9.994mm	9.862mm	3T
Set Plug 6g	**372527010**	**372527020**	$160.00	**372527030**	$336.00	25.4mm	25.4mm	9.994mm	9.862mm	2
M12.0 X 1.00 LH										
Taperlock Plug 6H	**302528010**	**302528020**	$118.00	**302528030**	$252.00	19.0mm	9.5mm	11.350mm	11.510mm	2
Ring 6g	**362528010**	**362528020**	$316.00	**362528030**	$632.00	11.1mm	11.1mm	11.324mm	11.206mm	3T
Set Plug 6g	**372528010**	**372528020**	$169.00	**372528030**	$354.00	25.4mm	25.4mm	11.324mm	11.206mm	2
M12.0 X 1.25 LH										
Taperlock Plug 6H	**302528510**	**302528520**	$113.00	**302528530**	$242.00	19.0mm	9.5mm	11.188mm	11.368mm	2
Ring 6g	**362528510**	**362528520**	$299.00	**362528530**	$598.00	11.1mm	11.1mm	11.160mm	11.028mm	3T
Set Plug 6g	**372528510**	**372528520**	$161.00	**372528530**	$338.00	25.4mm	25.4mm	11.160mm	11.028mm	2
M12.0 X 1.50 LH										
Taperlock Plug 6H	**302529510**	**302529520**	$113.00	**302529530**	$242.00	19.0mm	9.5mm	11.026mm	11.216mm	2
Ring 6g	**362529510**	**362529520**	$299.00	**362529530**	$598.00	11.1mm	11.1mm	10.994mm	10.854mm	3T
Set Plug 6g	**372529510**	**372529520**	$161.00	**372529530**	$338.00	25.4mm	25.4mm	10.994mm	10.854mm	2
M12.0 X 1.75 LH										
Taperlock Plug 6H	**302530510**	**302530520**	$113.00	**302530530**	$242.00	19.0mm	9.5mm	10.863mm	11.063mm	2
Ring 6g	**362530510**	**362530520**	$299.00	**362530530**	$598.00	11.1mm	11.1mm	10.829mm	10.679mm	3T
Set Plug 6g	**372530510**	**372530520**	$161.00	**372530530**	$338.00	25.4mm	25.4mm	10.829mm	10.679mm	2
M14.0 X 1.00 LH										
Taperlock Plug 6H	**302531010**	**302531020**	$125.00	**302531030**	$266.00	22.2mm	12.7mm	13.350mm	13.510mm	3
Ring 6g	**362531010**	**362531020**	$318.00	**362531030**	$636.00	14.3mm	14.3mm	13.324mm	13.206mm	4T
Set Plug 6g	**372531010**	**372531020**	$178.00	**372531030**	$372.00	31.8mm	31.8mm	13.324mm	13.206mm	3
M14.0 X 1.25 LH										
Taperlock Plug 6H	**302531510**	**302531520**	$113.00	**302531530**	$242.00	22.2mm	12.7mm	13.188mm	13.368mm	3
Ring 6g	**362531510**	**362531520**	$305.00	**362531530**	$610.00	14.3mm	14.3mm	13.160mm	13.028mm	4T
Set Plug 6g	**372531510**	**372531520**	$161.00	**372531530**	$338.00	31.8mm	31.8mm	13.160mm	13.028mm	3
M14.0 X 1.50 LH										
Taperlock Plug 6H	**302532010**	**302532020**	$113.00	**302532030**	$242.00	22.2mm	12.7mm	13.026mm	13.216mm	3
Ring 6g	**362532010**	**362532020**	$305.00	**362532030**	$610.00	14.3mm	14.3mm	12.994mm	12.854mm	4T
Set Plug 6g	**372532010**	**372532020**	$161.00	**372532030**	$338.00	31.8mm	31.8mm	12.994mm	12.854mm	3

Standard Left Hand Thread Gages

METRIC	Part No. Go Member	Part No. NoGo Member	Price	Part No. Go/NoGo Set	Price	Gage length Go (Min)	Gage length NoGo (Min)	Pitch Diameters Go	Pitch Diameters NoGo	Handle No.
M14.0 X 2.00 LH										
Taperlock Plug 6H	**302533010**	**302533020**	$113.00	**302533030**	$242.00	22.2mm	12.7mm	12.701mm	12.913mm	3
Ring 6g	**362533010**	**362533020**	$305.00	**362533030**	$610.00	14.3mm	14.3mm	12.663mm	12.503mm	4T
Set Plug 6g	**372533010**	**372533020**	$161.00	**372533030**	$338.00	31.8mm	31.8mm	12.663mm	12.503mm	3
M15.0 X 1.00 LH										
Taperlock Plug 6H	**302534510**	**302534520**	$131.00	**302534530**	$278.00	22.2mm	12.7mm	14.350mm	14.510mm	3
Ring 6g	**362534510**	**362534520**	$342.00	**362534530**	$684.00	14.3mm	14.3mm	14.324mm	14.206mm	4T
Set Plug 6g	**372534510**	**372534520**	$185.00	**372534530**	$386.00	31.8mm	31.8mm	14.324mm	14.206mm	3
M15.0 X 1.50 LH										
Taperlock Plug 6H	**302535510**	**302535520**	$117.00	**302535530**	$250.00	22.2mm	12.7mm	14.026mm	14.216mm	3
Ring 6g	**362535510**	**362535520**	$310.00	**362535530**	$620.00	14.3mm	14.3mm	13.994mm	13.854mm	4T
Set Plug 6g	**372535510**	**372535520**	$168.00	**372535530**	$352.00	31.8mm	31.8mm	13.994mm	13.854mm	3
M16.0 X 1.00 LH										
Taperlock Plug 6H	**302536010**	**302536020**	$142.00	**302536030**	$300.00	22.2mm	12.7mm	15.350mm	15.510mm	3
Ring 6g	**362536010**	**362536020**	$350.00	**362536030**	$700.00	14.3mm	14.3mm	15.324mm	15.206mm	4T
Set Plug 6g	**372536010**	**372536020**	$208.00	**372536030**	$432.00	31.8mm	31.8mm	15.324mm	15.206mm	3
M16.0 X 1.50 LH										
Taperlock Plug 6H	**302537010**	**302537020**	$117.00	**302537030**	$250.00	22.2mm	12.7mm	15.026mm	15.216mm	3
Ring 6g	**362537010**	**362537020**	$316.00	**362537030**	$632.00	14.3mm	14.3mm	14.994mm	14.854mm	4T
Set Plug 6g	**372537010**	**372537020**	$168.00	**372537030**	$352.00	31.8mm	31.8mm	14.994mm	14.854mm	3
M16.0 X 2.00 LH										
Taperlock Plug 6H	**302538010**	**302538020**	$117.00	**302538030**	$250.00	22.2mm	12.7mm	14.701mm	14.913mm	3
Ring 6g	**362538010**	**362538020**	$316.00	**362538030**	$632.00	14.3mm	14.3mm	14.663mm	14.503mm	4T
Set Plug 6g	**372538010**	**372538020**	$168.00	**372538030**	$352.00	31.8mm	31.8mm	14.663mm	14.503mm	3
M17.0 X 1.00 LH										
Taperlock Plug 6H	**302539510**	**302539520**	$142.00	**302539530**	$300.00	22.2mm	12.7mm	16.350mm	16.510mm	3
Ring 6g	**362539510**	**362539520**	$350.00	**362539530**	$700.00	14.3mm	14.3mm	16.324mm	16.206mm	4T
Set Plug 6g	**372539510**	**372539520**	$208.00	**372539530**	$432.00	31.8mm	31.8mm	16.324mm	16.206mm	3
M17.0 X 1.50 LH										
Taperlock Plug 6H	**302540510**	**302540520**	$117.00	**302540530**	$250.00	22.2mm	12.7mm	16.026mm	16.216mm	3
Ring 6g	**362540510**	**362540520**	$316.00	**362540530**	$632.00	14.3mm	14.3mm	15.994mm	15.854mm	4T
Set Plug 6g	**372540510**	**372540520**	$168.00	**372540530**	$352.00	31.8mm	31.8mm	15.994mm	15.854mm	3
M18.0 X 1.00 LH										
Taperlock Plug 6H	**302541010**	**302541020**	$142.00	**302541030**	$300.00	22.2mm	12.7mm	17.350mm	17.510mm	3
Ring 6g	**362541010**	**362541020**	$350.00	**362541030**	$700.00	14.3mm	14.3mm	17.324mm	17.206mm	4T
Set Plug 6g	**372541010**	**372541020**	$208.00	**372541030**	$432.00	31.8mm	31.8mm	17.324mm	17.206mm	3
M18.0 X 1.50 LH										
Taperlock Plug 6H	**302542010**	**302542020**	$117.00	**302542030**	$250.00	22.2mm	12.7mm	17.026mm	17.216mm	3
Ring 6g	**362542010**	**362542020**	$318.00	**362542030**	$636.00	14.3mm	14.3mm	16.994mm	16.854mm	4T
Set Plug 6g	**372542010**	**372542020**	$168.00	**372542030**	$352.00	31.8mm	31.8mm	16.994mm	16.854mm	3
M18.0 X 2.00 LH										
Taperlock Plug 6H	**302542510**	**302542520**	$117.00	**302542530**	$250.00	22.2mm	12.7mm	16.701mm	16.913mm	3
Ring 6g	**362542510**	**362542520**	$318.00	**362542530**	$636.00	14.3mm	14.3mm	16.663mm	16.503mm	4T
Set Plug 6g	**372542510**	**372542520**	$168.00	**372542530**	$352.00	31.8mm	31.8mm	16.663mm	16.503mm	3
M18.0 X 2.50 LH										
Taperlock Plug 6H	**302543010**	**302543020**	$117.00	**302543030**	$250.00	22.2mm	12.7mm	16.376mm	16.600mm	3
Ring 6g	**362543010**	**362543020**	$316.00	**362543030**	$632.00	19.0mm	14.3mm	16.334mm	16.164mm	4T
Set Plug 6g	**372543010**	**372543020**	$168.00	**372543030**	$352.00	47.6mm	31.8mm	16.334mm	16.164mm	3
M20.0 X 1.00 LH										
Taperlock Plug 6H	**302544510**	**302544520**	$152.00	**302544530**	$320.00	22.2mm	12.7mm	19.350mm	19.510mm	3
Ring 6g	**362544510**	**362544520**	$365.00	**362544530**	$730.00	14.3mm	14.3mm	19.324mm	19.206mm	4T
Set Plug 6g	**372544510**	**372544520**	$224.00	**372544530**	$464.00	31.8mm	31.8mm	19.324mm	19.206mm	3
M20.0 X 1.50 LH										
Taperlock Plug 6H	**302545510**	**302545520**	$119.00	**302545530**	$254.00	22.2mm	12.7mm	19.026mm	19.216mm	3
Ring 6g	**362545510**	**362545520**	$326.00	**362545530**	$652.00	14.3mm	14.3mm	18.994mm	18.854mm	4T
Set Plug 6g	**372545510**	**372545520**	$172.00	**372545530**	$360.00	31.8mm	31.8mm	18.994mm	18.854mm	3

Standard Left Hand Thread Gages

METRIC	Part No. Go Member	Part No. NoGo Member	Price	Part No. Go/NoGo Set	Price	Gage length Go (Min)	Gage length NoGo (Min)	Pitch Diameters Go	Pitch Diameters NoGo	Handle No.
M20.0 X 2.00 LH										
Taperlock Plug 6H	**302546010**	**302546020**	$119.00	**302546030**	$254.00	22.2mm	12.7mm	18.701mm	18.913mm	3
Ring 6g	**362546010**	**362546020**	$326.00	**362546030**	$652.00	14.3mm	14.3mm	18.663mm	18.503mm	4T
Set Plug 6g	**372546010**	**372546020**	$172.00	**372546030**	$360.00	31.8mm	31.8mm	18.663mm	18.503mm	3
M20.0 X 2.50 LH										
Taperlock Plug 6H	**302546510**	**302546520**	$119.00	**302546530**	$254.00	22.2mm	12.7mm	18.376mm	18.600mm	3
Ring 6g	**362546510**	**362546520**	$326.00	**362546530**	$652.00	19.0mm	14.3mm	18.334mm	18.164mm	4T
Set Plug 6g	**372546510**	**372546520**	$172.00	**372546530**	$360.00	47.6mm	31.8mm	18.334mm	18.164mm	3
M22.0 X 1.00 LH										
Taperlock Plug 6H	**302547010**	**302547020**	$152.00	**302547030**	$321.25	25.4mm	15.9mm	21.350mm	21.510mm	4
Ring 6g	**362547010**	**362547020**	$360.00	**362547030**	$720.00	17.5mm	17.5mm	21.324mm	21.206mm	5T
Set Plug 6g	**372547010**	**372547020**	$224.00	**372547030**	$465.25	38.1mm	38.1mm	21.324mm	21.206mm	4
M22.0 X 1.50 LH										
Taperlock Plug 6H	**302548010**	**302548020**	$119.00	**302548030**	$255.25	25.4mm	15.9mm	21.026mm	21.216mm	4
Ring 6g	**362548010**	**362548020**	$326.00	**362548030**	$652.00	17.5mm	17.5mm	20.994mm	20.854mm	5T
Set Plug 6g	**372548010**	**372548020**	$172.00	**372548030**	$361.25	38.1mm	38.1mm	20.994mm	20.854mm	4
M22.0 X 2.00 LH										
Taperlock Plug 6H	**302548510**	**302548520**	$119.00	**302548530**	$255.25	25.4mm	15.9mm	20.701mm	20.913mm	4
Ring 6g	**362548510**	**362548520**	$326.00	**362548530**	$652.00	17.5mm	17.5mm	20.663mm	20.503mm	5T
Set Plug 6g	**372548510**	**372548520**	$172.00	**372548530**	$361.25	38.1mm	38.1mm	20.663mm	20.503mm	4
M22.0 X 2.50 LH										
Taperlock Plug 6H	**302549010**	**302549020**	$119.00	**302549030**	$255.25	25.4mm	15.9mm	20.376mm	20.600mm	4
Ring 6g	**362549010**	**362549020**	$326.00	**362549030**	$652.00	23.8mm	17.5mm	20.334mm	20.164mm	5T
Set Plug 6g	**372549010**	**372549020**	$172.00	**372549030**	$361.25	54.0mm	38.1mm	20.334mm	20.164mm	4
M24.0 X 1.00 LH										
Taperlock Plug 6H	**302549510**	**302549520**	$153.00	**302549530**	$323.25	25.4mm	15.9mm	23.350mm	23.520mm	4
Ring 6g	**362549510**	**362549520**	$374.00	**362549530**	$748.00	17.5mm	17.5mm	23.324mm	23.199mm	5T
Set Plug 6g	**372549510**	**372549520**	$226.00	**372549530**	$469.25	38.1mm	38.1mm	23.324mm	23.199mm	4
M24.0 X 1.50 LH										
Taperlock Plug 6H	**302550010**	**302550020**	$132.00	**302550030**	$281.25	25.4mm	15.9mm	23.026mm	23.226mm	4
Ring 6g	**362550010**	**362550020**	$350.00	**362550030**	$700.00	17.5mm	17.5mm	22.994mm	22.844mm	5T
Set Plug 6g	**372550010**	**372550020**	$188.00	**372550030**	$393.25	38.1mm	38.1mm	22.994mm	22.844mm	4
M24.0 X 2.00 LH										
Taperlock Plug 6H	**302550510**	**302550520**	$132.00	**302550530**	$281.25	25.4mm	15.9mm	22.701mm	22.925mm	4
Ring 6g	**362550510**	**362550520**	$342.00	**362550530**	$684.00	17.5mm	17.5mm	22.663mm	22.493mm	5T
Set Plug 6g	**372550510**	**372550520**	$187.00	**372550530**	$391.25	38.1mm	38.1mm	22.663mm	22.493mm	4
M24.0 X 3.00 LH										
Taperlock Plug 6H	**302551510**	**302551520**	$141.00	**302551530**	$299.25	25.4mm	15.9mm	22.051mm	22.316mm	4
Ring 6g	**362551510**	**362551520**	$342.00	**362551530**	$684.00	23.8mm	17.5mm	22.003mm	21.803mm	5T
Set Plug 6g	**372551510**	**372551520**	$200.00	**372551530**	$417.25	54.0mm	38.1mm	22.003mm	21.803mm	4
M25.0 X 1.00 LH										
Taperlock Plug 6H	**302552010**	**302552020**	$153.00	**302552030**	$323.25	25.4mm	15.9mm	24.350mm	24.520mm	4
Ring 6g	**362552010**	**362552020**	$374.00	**362552030**	$748.00	17.5mm	17.5mm	24.324mm	24.199mm	5T
Set Plug 6g	**372552010**	**372552020**	$226.00	**372552030**	$469.25	38.1mm	38.1mm	24.324mm	24.199mm	4
M25.0 X 1.50 LH										
Taperlock Plug 6H	**302553010**	**302553020**	$133.00	**302553030**	$283.25	25.4mm	15.9mm	24.026mm	24.226mm	4
Ring 6g	**362553010**	**362553020**	$350.00	**362553030**	$700.00	17.5mm	17.5mm	23.994mm	23.844mm	5T
Set Plug 6g	**372553010**	**372553020**	$187.00	**372553030**	$391.25	38.1mm	38.1mm	23.994mm	23.844mm	4
M25.0 X 2.00 LH										
Taperlock Plug 6H	**302554010**	**302554020**	$132.00	**302554030**	$281.25	25.4mm	15.9mm	23.701mm	23.925mm	4
Ring 6g	**362554010**	**362554020**	$350.00	**362554030**	$700.00	17.5mm	17.5mm	23.663mm	23.493mm	5T
Set Plug 6g	**372554010**	**372554020**	$187.00	**372554030**	$391.25	38.1mm	38.1mm	23.663mm	23.493mm	4
M26.0 X 1.00 LH										
Taperlock Plug 6H	**302555510**	**302555520**	$157.00	**302555530**	$331.25	25.4mm	15.9mm	25.350mm	25.520mm	4
Ring 6g	**362555510**	**362555520**	$398.00	**362555530**	$796.00	17.5mm	17.5mm	25.324mm	25.199mm	5T
Set Plug 6g	**372555510**	**372555520**	$229.00	**372555530**	$475.25	38.1mm	38.1mm	25.324mm	25.199mm	4

Standard Left Hand Thread Gages

METRIC	Part No. Go Member	Part No. NoGo Member	Price	Part No. Go/NoGo Set	Price	Gage length Go (Min)	Gage length NoGo (Min)	Pitch Diameters Go	Pitch Diameters NoGo	Handle No.
M26.0 X 1.50 LH										
Taperlock Plug 6H	**302556510**	**302556520**	$141.00	**302556530**	$299.25	25.4mm	15.9mm	25.026mm	25.226mm	4
Ring 6g	**362556510**	**362556520**	$334.00	**362556530**	$668.00	17.5mm	17.5mm	24.994mm	24.844mm	5T
Set Plug 6g	**372556510**	**372556520**	$200.00	**372556530**	$417.25	38.1mm	38.1mm	24.994mm	24.844mm	4
M27.0 X 1.00 LH										
Taperlock Plug 6H	**302557010**	**302557020**	$157.00	**302557030**	$331.25	25.4mm	15.9mm	26.350mm	26.520mm	4
Ring 6g	**362557010**	**362557020**	$398.00	**362557030**	$796.00	17.5mm	17.5mm	26.324mm	26.199mm	5T
Set Plug 6g	**372557010**	**372557020**	$229.00	**372557030**	$475.25	38.1mm	38.1mm	26.324mm	26.199mm	4
M27.0 X 1.50 LH										
Taperlock Plug 6H	**302557510**	**302557520**	$141.00	**302557530**	$299.25	25.4mm	15.9mm	26.026mm	26.226mm	4
Ring 6g	**362557510**	**362557520**	$334.00	**362557530**	$668.00	17.5mm	17.5mm	25.994mm	25.844mm	5T
Set Plug 6g	**372557510**	**372557520**	$200.00	**372557530**	$417.25	38.1mm	38.1mm	25.994mm	25.844mm	4
M27.0 X 2.00 LH										
Taperlock Plug 6H	**302558010**	**302558020**	$141.00	**302558030**	$299.25	25.4mm	15.9mm	25.701mm	25.925mm	4
Ring 6g	**362558010**	**362558020**	$334.00	**362558030**	$668.00	17.5mm	17.5mm	25.663mm	25.493mm	5T
Set Plug 6g	**372558010**	**372558020**	$222.00	**372558030**	$461.25	38.1mm	38.1mm	25.663mm	25.493mm	4
M27.0 X 3.00 LH										
Taperlock Plug 6H	**302559010**	**302559020**	$141.00	**302559030**	$299.25	25.4mm	15.9mm	25.051mm	25.316mm	4
Ring 6g	**362559010**	**362559020**	$334.00	**362559030**	$668.00	23.8mm	17.5mm	25.003mm	24.803mm	5T
Set Plug 6g	**372559010**	**372559020**	$222.00	**372559030**	$461.25	54.0mm	38.1mm	25.003mm	24.803mm	4
M28.0 X 1.00 LH										
Taperlock Plug 6H	**302560510**	**302560520**	$157.00	**302560530**	$331.25	25.4mm	15.9mm	27.350mm	27.520mm	4
Ring 6g	**362560510**	**362560520**	$398.00	**362560530**	$796.00	17.5mm	17.5mm	27.324mm	27.199mm	5T
Set Plug 6g	**372560510**	**372560520**	$245.00	**372560530**	$507.25	38.1mm	38.1mm	27.324mm	27.199mm	4
M28.0 X 1.50 LH										
Taperlock Plug 6H	**302561510**	**302561520**	$142.00	**302561530**	$301.25	25.4mm	15.9mm	27.026mm	27.226mm	4
Ring 6g	**362561510**	**362561520**	$334.00	**362561530**	$668.00	17.5mm	17.5mm	26.994mm	26.844mm	5T
Set Plug 6g	**372561510**	**372561520**	$230.00	**372561530**	$477.25	38.1mm	38.1mm	26.994mm	26.844mm	4
M28.0 X 2.00 LH										
Taperlock Plug 6H	**302562510**	**302562520**	$142.00	**302562530**	$301.25	25.4mm	15.9mm	26.701mm	26.925mm	4
Ring 6g	**362562510**	**362562520**	$334.00	**362562530**	$668.00	17.5mm	17.5mm	26.663mm	26.493mm	5T
Set Plug 6g	**372562510**	**372562520**	$230.00	**372562530**	$477.25	38.1mm	38.1mm	26.663mm	26.493mm	4
M30.0 X 1.00 LH										
Taperlock Plug 6H	**302563010**	**302563020**	$161.00	**302563030**	$340.50	25.4mm	19.0mm	29.350mm	29.520mm	5
Ring 6g	**362563010**	**362563020**	$398.00	**362563030**	$796.00	19.0mm	19.0mm	29.324mm	29.199mm	6T
Set Plug 6g	**372563010**	**372563020**	$236.00	**372563030**	$490.50	41.3mm	41.3mm	29.324mm	29.199mm	5
M30.0 X 1.50 LH										
Taperlock Plug 6H	**302564010**	**302564020**	$141.00	**302564030**	$300.50	25.4mm	19.0mm	29.026mm	29.226mm	5
Ring 6g	**362564010**	**362564020**	$359.00	**362564030**	$718.00	19.0mm	19.0mm	28.994mm	28.844mm	6T
Set Plug 6g	**372564010**	**372564020**	$222.00	**372564030**	$462.50	41.3mm	41.3mm	28.994mm	28.844mm	5
M30.0 X 2.00 LH										
Taperlock Plug 6H	**302565010**	**302565020**	$141.00	**302565030**	$300.50	25.4mm	19.0mm	28.701mm	28.925mm	5
Ring 6g	**362565010**	**362565020**	$359.00	**362565030**	$718.00	19.0mm	19.0mm	28.663mm	28.493mm	6T
Set Plug 6g	**372565010**	**372565020**	$222.00	**372565030**	$462.50	41.3mm	41.3mm	28.663mm	28.493mm	5
M30.0 X 3.50 LH										
Taperlock Plug 6H	**302566010**	**302566020**	$175.00	**302566030**	$368.50	31.8mm	19.0mm	27.727mm	28.007mm	5
Ring 6g	**362566010**	**362566020**	$427.00	**362566030**	$854.00	28.6mm	19.0mm	27.674mm	27.462mm	6T
Set Plug 6g	**372566010**	**372566020**	$255.00	**372566030**	$528.50	60.3mm	41.3mm	27.674mm	27.462mm	5
M32.0 X 1.50 LH										
Taperlock Plug 6H	**302567510**	**302567520**	$151.00	**302567530**	$320.50	25.4mm	19.0mm	31.026mm	31.226mm	5
Ring 6g	**362567510**	**362567520**	$374.00	**362567530**	$748.00	19.0mm	19.0mm	30.994mm	30.844mm	6T
Set Plug 6g	**372567510**	**372567520**	$230.00	**372567530**	$478.50	41.3mm	41.3mm	30.994mm	30.844mm	5
M32.0 X 2.00 LH										
Taperlock Plug 6H	**302568510**	**302568520**	$151.00	**302568530**	$320.50	25.4mm	19.0mm	30.701mm	30.925mm	5
Ring 6g	**362568510**	**362568520**	$374.00	**362568530**	$748.00	19.0mm	19.0mm	30.663mm	30.493mm	6T
Set Plug 6g	**372568510**	**372568520**	$230.00	**372568530**	$478.50	41.3mm	41.3mm	30.663mm	30.493mm	5

Standard Left Hand Thread Gages

METRIC	Part No. Go Member	Part No. NoGo Member	Price	Part No. Go/NoGo Set	Price	Gage length Go (Min)	Gage length NoGo (Min)	Pitch Diameters Go	Pitch Diameters NoGo	Handle No.
M33.0 X 1.50 LH										
Taperlock Plug 6H	**302569010**	**302569020**	$151.00	**302569030**	$320.50	25.4mm	19.0mm	32.026mm	32.226mm	5
Ring 6g	**362569010**	**362569020**	$374.00	**362569030**	$748.00	19.0mm	19.0mm	31.994mm	31.844mm	6T
Set Plug 6g	**372569010**	**372569020**	$230.00	**372569030**	$478.50	41.3mm	41.3mm	31.994mm	31.844mm	5
M33.0 X 2.00 LH										
Taperlock Plug 6H	**302570010**	**302570020**	$148.00	**302570030**	$314.50	25.4mm	19.0mm	31.701mm	31.925mm	5
Ring 6g	**362570010**	**362570020**	$374.00	**362570030**	$748.00	19.0mm	19.0mm	31.663mm	31.493mm	6T
Set Plug 6g	**372570010**	**372570020**	$245.00	**372570030**	$508.50	41.3mm	41.3mm	31.663mm	31.493mm	5
M33.0 X 3.50 LH										
Taperlock Plug 6H	**302571010**	**302571020**	$183.00	**302571030**	$384.50	31.8mm	19.0mm	30.727mm	31.007mm	5
Ring 6g	**362571010**	**362571020**	$440.00	**362571030**	$880.00	28.6mm	19.0mm	30.674mm	30.462mm	6T
Set Plug 6g	**372571010**	**372571020**	$265.00	**372571030**	$548.50	60.3mm	41.3mm	30.674mm	30.462mm	5
M35.0 X 1.50 LH										
Taperlock Plug 6H	**302572510**	**302572520**	$168.00	**302572530**	$354.50	25.4mm	19.0mm	34.026mm	34.226mm	5
Ring 6g	**362572510**	**362572520**	$422.00	**362572530**	$844.00	19.0mm	19.0mm	33.994mm	33.844mm	6T
Set Plug 6g	**372572510**	**372572520**	$270.00	**372572530**	$558.50	41.3mm	41.3mm	33.994mm	33.844mm	5
M36.0 X 1.50 LH										
Taperlock Plug 6H	**302573010**	**302573020**	$168.00	**302573030**	$354.50	25.4mm	19.0mm	35.026mm	35.226mm	5
Ring 6g	**362573010**	**362573020**	$389.00	**362573030**	$778.00	19.0mm	19.0mm	34.994mm	34.844mm	6T
Set Plug 6g	**372573010**	**372573020**	$245.00	**372573030**	$508.50	41.3mm	41.3mm	34.994mm	34.844mm	5
M36.0 X 2.00 LH										
Taperlock Plug 6H	**302574010**	**302574020**	$168.00	**302574030**	$354.50	25.4mm	19.0mm	34.701mm	34.925mm	5
Ring 6g	**362574010**	**362574020**	$387.00	**362574030**	$774.00	19.0mm	19.0mm	34.663mm	34.493mm	6T
Set Plug 6g	**372574010**	**372574020**	$245.00	**372574030**	$508.50	41.3mm	41.3mm	34.663mm	34.493mm	5
M36.0 X 3.00 LH										
Taperlock Plug 6H	**302575010**	**302575020**	$168.00	**302575030**	$354.50	31.8mm	19.0mm	34.051mm	34.316mm	5
Ring 6g	**362575010**	**362575020**	$406.00	**362575030**	$812.00	28.6mm	19.0mm	34.003mm	33.803mm	6T
Set Plug 6g	**372575010**	**372575020**	$245.00	**372575030**	$508.50	60.3mm	41.3mm	34.003mm	33.803mm	5
M36.0 X 4.00 LH										
Taperlock Plug 6H	**302576010**	**302576020**	$191.00	**302576030**	$400.50	31.8mm	19.0mm	33.402mm	33.702mm	5
Ring 6g	**362576010**	**362576020**	$449.00	**362576030**	$898.00	28.6mm	19.0mm	33.342mm	33.118mm	6T
Set Plug 6g	**372576010**	**372576020**	$278.00	**372576030**	$574.50	60.3mm	41.3mm	33.342mm	33.118mm	5
M38.0 X 1.50 LH										
Taperlock Plug 6H	**302577510**	**302577520**	$192.00	**302577530**	$402.50	25.4mm	19.0mm	37.026mm	37.226mm	5
Ring 6g	**362577510**	**362577520**	$450.00	**362577530**	$900.00	19.0mm	19.0mm	36.994mm	36.844mm	6T
Set Plug 6g	**372577510**	**372577520**	$263.00	**372577530**	$544.50	41.3mm	41.3mm	36.994mm	36.844mm	5
M39.0 X 1.50 LH										
Trilock Plug 6H	**302578010**	**302578020**	$215.00	**302578030**	$454.00	31.8mm	22.2mm	38.026mm	38.226mm	5 1/2
Ring 6g	**362578010**	**362578020**	$438.00	**362578030**	$876.00	20.6mm	20.6mm	37.994mm	37.844mm	
Set Plug 6g	**372578010**	**372578020**	$304.00	**372578030**	$632.00	47.6mm	47.6mm	37.994mm	37.844mm	5 1/2
M39.0 X 2.00 LH										
Trilock Plug 6H	**302579010**	**302579020**	$215.00	**302579030**	$454.00	31.8mm	22.2mm	37.701mm	37.925mm	5 1/2
Ring 6g	**362579010**	**362579020**	$438.00	**362579030**	$876.00	20.6mm	20.6mm	37.663mm	37.493mm	
Set Plug 6g	**372579010**	**372579020**	$304.00	**372579030**	$632.00	47.6mm	47.6mm	37.663mm	37.493mm	5 1/2
M39.0 X 3.00 LH										
Trilock Plug 6H	**302580010**	**302580020**	$215.00	**302580030**	$454.00	31.8mm	22.2mm	37.051mm	37.316mm	5 1/2
Ring 6g	**362580010**	**362580020**	$438.00	**362580030**	$876.00	31.8mm	20.6mm	37.003mm	36.803mm	
Set Plug 6g	**372580010**	**372580020**	$304.00	**372580030**	$632.00	73.0mm	47.6mm	37.003mm	36.803mm	5 1/2
M39.0 X 4.00 LH										
Trilock Plug 6H	**302581010**	**302581020**	$244.00	**302581030**	$512.00	47.6mm	22.2mm	36.402mm	36.702mm	5 1/2
Ring 6g	**362581010**	**362581020**	$459.00	**362581030**	$918.00	31.8mm	20.6mm	36.342mm	36.118mm	
Set Plug 6g	**372581010**	**372581020**	$345.00	**372581030**	$714.00	73.0mm	47.6mm	36.342mm	36.118mm	5 1/2

Standard Thread Measuring Wires

CHECK YOUR PITCH DIAMETERS

Vermont Gage Thread Measuring Wires, used together with a micrometer, are used to quickly and accurately measure pitch diameters of external threads. They are perfect for calibrating or checking wear on thread plug gages, and can be used to monitor and control pitch diameters of manufactured threads.

- ***Tolerance (+/-.000010") of calibrated nominal diameter (+/-.000020") of nominal best wire diameter***
- ***Tool Steel; 59/64 Rc***
- ***2" long***
- ***2 microinch finish***
- ***Within .00001" round***
- ***100% inspected***
- ***ASME B89.1.17***
- ***Certificate of Accuracy included***
- ***See page 111 for Calibration Services***

60° INCH WIRES

Threads per Inch	Nominal Best Wire Diameter (Decimal)	Nominal Constant (Decimal)	Part No. 3-Wire Set	Price
120	0.00481	0.00722	**351100510**	$128.00
100	0.00577	0.00866	**351101010**	$128.00
96	0.00601	0.00902	**351101510**	$128.00
90	0.00642	0.00962	**351102010**	$128.00
80	0.00722	0.01083	**351102510**	$128.00
72	0.00802	0.01203	**351103010**	$128.00
64	0.00902	0.01353	**351103510**	$128.00
56	0.01031	0.01546	**351104010**	$128.00
50	0.01155	0.01732	**351104510**	$128.00
48	0.01203	0.01804	**351105010**	$83.00
44	0.01312	0.01968	**351105510**	$83.00
40	0.01443	0.02165	**351106010**	$83.00
36	0.01604	0.02406	**351106510**	$83.00
32	0.01804	0.02706	**351107010**	$83.00
30	0.01925	0.02887	**351107510**	$83.00
28	0.02062	0.03093	**351108010**	$83.00
27	0.02138	0.03208	**351108510**	$83.00
26	0.02221	0.03331	**351109010**	$83.00
24	0.02406	0.03608	**351109510**	$83.00
22	0.02624	0.03936	**351110010**	$83.00
20	0.02887	0.04330	**351110510**	$83.00
18	0.03208	0.04811	**351111010**	$83.00
16	0.03608	0.05413	**351111510**	$83.00
14	0.04124	0.06186	**351112010**	$83.00
13	0.04441	0.06662	**351112510**	$83.00
12	0.04811	0.07217	**351113010**	$83.00
11 1/2	0.05020	0.07531	**351113510**	$83.00
11	0.05249	0.07873	**351114010**	$83.00
10	0.05774	0.08660	**351114510**	$83.00
9	0.06415	0.09623	**351115010**	$83.00
8	0.07217	0.10825	**351115510**	$83.00
7 1/2	0.07698	0.11547	**351116010**	$83.00
7	0.08248	0.12372	**351116510**	$83.00
6	0.09623	0.14434	**351117010**	$83.00
5 1/2	0.10497	0.15746	**351117510**	$116.00
5	0.11547	0.17321	**351118010**	$118.00
4 1/2	0.12830	0.19245	**351118510**	$118.00
4	0.14434	0.21651	**351119010**	$121.00
3 1/2	0.16496	0.24744	**351119510**	$121.00
3 1/4	0.17765	0.26647	**351120010**	$121.00
3	0.19245	0.28868	**351120510**	$121.00
2 3/4	0.20995	0.31492	**351121010**	$121.00
2 1/2	0.23094	0.34641	**351121510**	$128.00
2	0.28868	0.43301	**351122010**	$128.00

Standard Thread Measuring Wires

60° METRIC WIRES

Pitch	Nominal Best Wire Diameter (mm)	Nominal Constant (mm)	Part No. 3-Wire Set	Price
0.2	0.1155	0.1732	**352100510**	$128.00
0.225	0.1299	0.1949	**352101010**	$128.00
0.25	0.1443	0.2165	**352101510**	$128.00
0.3	0.1732	0.2598	**352102010**	$128.00
0.35	0.2021	0.3031	**352102510**	$128.00
0.4	0.2309	0.3464	**352103010**	$128.00
0.45	0.2598	0.3897	**352103510**	$128.00
0.5	0.2887	0.4330	**352104010**	$128.00
0.6	0.3464	0.5196	**352104510**	$118.00
0.7	0.4041	0.6062	**352105010**	$118.00
0.75	0.4330	0.6495	**352105510**	$118.00
0.8	0.4619	0.6928	**352106010**	$118.00
0.9	0.5196	0.7794	**352106510**	$118.00
1.0	0.5774	0.8660	**352107010**	$83.00
1.25	0.7217	1.0825	**352107510**	$83.00
1.5	0.8660	1.2990	**352108010**	$83.00
1.75	1.0104	1.5155	**352108510**	$83.00
2.0	1.1547	1.7321	**352109010**	$83.00
2.5	1.4434	2.1651	**352109510**	$83.00
3.0	1.7321	2.5981	**352110010**	$83.00
3.5	2.0207	3.0311	**352110510**	$83.00
4.0	2.3094	3.4641	**352111010**	$83.00
4.5	2.5981	3.8971	**352111510**	$104.00
5.0	2.8868	4.3301	**352112010**	$118.00
5.5	3.1754	4.7631	**352112510**	$118.00
6.0	3.4641	5.1962	**352113010**	$118.00
7.0	4.0415	6.0622	**352113510**	$121.00
8.0	4.6188	6.9282	**352114010**	$121.00
9.0	5.1962	7.7942	**352114510**	$121.00
10	5.7735	8.6603	**352115010**	$128.00

29° ACME WIRES

Pitch	Nominal Best Wire Diameter (mm)	Part No. 3-Wire Set	Price
1	0.51645	**353100510**	$152.00
1 1/3	0.38734	**353101010**	$137.00
1 1/2	0.34430	**353101510**	$137.00
1 3/4	0.29511	**353102010**	$137.00
2	0.25823	**353102510**	$137.00
2 1/2	0.20658	**353103010**	$137.00
3	0.17215	**353103510**	$137.00
3 1/2	0.14756	**353104010**	$121.00
4	0.12911	**353104510**	$121.00
4 1/2	0.11477	**353105010**	$121.00
5	0.10329	**353105510**	$110.00
5 1/2	0.09390	**353106010**	$106.00
6	0.08608	**353106510**	$106.00
7	0.07378	**353107010**	$106.00
8	0.06456	**353107510**	$106.00
9	0.05738	**353108010**	$106.00
10	0.05164	**353108510**	$106.00
12	0.04304	**353109010**	$106.00
14	0.03689	**353109510**	$106.00
16	0.03228	**353110010**	$106.00
18	0.02869	**353110510**	$106.00
20	0.02582	**353111010**	$106.00

No constant is included with ACME Wires.
The constant must be calculated for each thread size.

THREAD MEASURING WIRE SETS

Description	Part No.	Price
4 to 80 TPI (34 sizes in set)	**359100530**	$3,110.00
5 to 80 TPI (30 sizes in set)*	**359101030**	$2,695.00
6 to 36 TPI (20 sizes in set)*	**359101530**	$1,945.00
.2 to 10mm Pitch (30 sizes in set)	**359102030**	$3,180.00
.3 to 6mm Pitch (23 sizes in set)	**359102530**	$2,385.00
*7-1/2 and 22 threads per inch wires not included		

Basic 60º Thread Measuring Wire Information

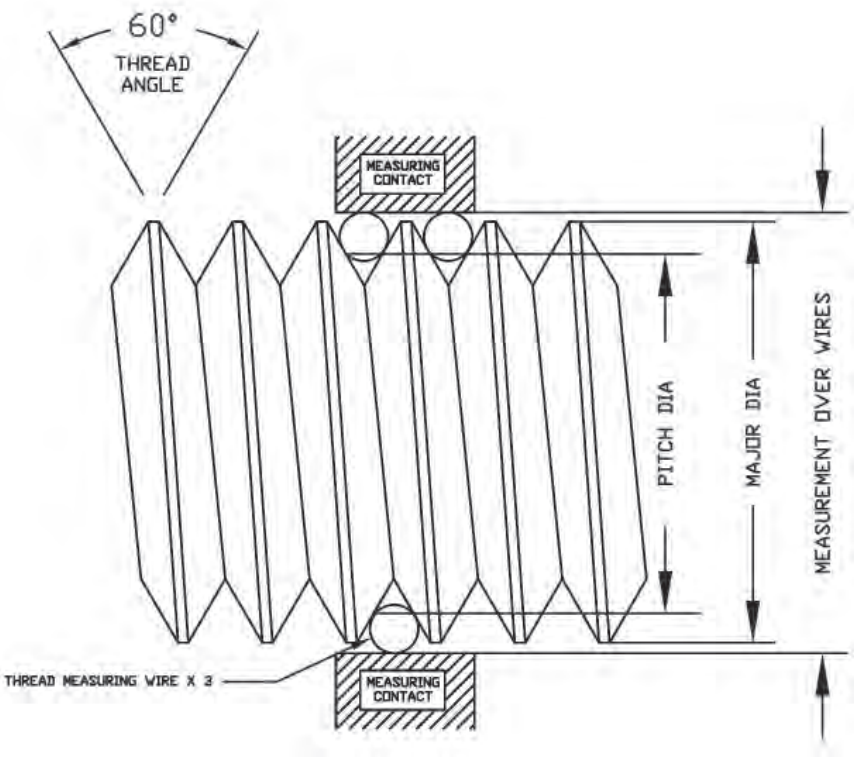

Pitch Diameter = Measurement over wires (MOW) - Constant
w = wire size

Pitch (P) = 1/number of threads per inch. This is the distance the thread travels in one turn.
Constant (C) = (3 * w) - (.86602540 * P)

Pitch Diameter (PD) is the halfway point between sharp major and minor diameters.
Measured PD = MOW - (3 * w) - (.86602540 * P)

Reference ANSI/ASME Standards:
B89.1.7 - "Measurement of Thread Measuring Wires"

B1.7 - "Nomenclature, Definitions & Letter Symbols for Screw Threads"

B1.1 - "Unified Inch Screw Threads (UN & UNR Thread Form)"

B1.2 - "Gages & Gaging for Unified Inch Screw Threads"

B1.13M - "Metric Screw Threads: M Profile"

B1.16M - "Gages & Gaging for Metric M Screw Threads"

B18.29.1 - "Helical Coil Screw Thread Inserts - Free Running and Screw Locking (Inch Series)"

Standard Gear Measuring Wires

Gear Measuring Wires are a quick & economical method to measure the tooth thickness of gears at the pitch diameter. Gear Measuring Wires are the same as Thread Measuring Wires except that Gear Measuring Wires are supplied in 2 wire sets. Special 3 wire sets & sizes may be quoted upon request.

- ***Tolerance +/-.000010"***
- ***Round within .00001"***
- ***Wires within sets up to .825" are matched within .00001"***
- ***Oil Hardened Tool Steel or High Speed Steel***
- ***2" long***
- ***2 rms or better***
- ***Certificate of Accuracy included***
- ***See page 111 for Calibration Services***

Pitch	1.92" Series Wire Dia	Part No. Set of 2	Price	1.728" Series Wire Dia	Part No. Set of 2	Price	1.68" Series Wire Dia	Part No. Set of 2	Price	1.44" Series Wire Dia	Part No. Set of 2	Price
2	0.960	**357100510**	$118.00	0.864	**357200510**	$118.00	0.840	**357300510**	$118.00	0.720	**357400510**	$105.00
2 1/2	0.768	**357101010**	$118.00	0.6912	**357201010**	$118.00	0.672	**357301010**	$118.00	0.576	**357401010**	$105.00
3	0.640	**357101510**	$104.00	0.576	**357201510**	$104.00	0.560	**357301510**	$104.00	0.480	**357401510**	$106.00
4	0.480	**357102010**	$104.00	0.432	**357202010**	$104.00	0.420	**357302010**	$104.00	0.360	**357402010**	$106.00
5	0.384	**357102510**	$83.00	0.3456	**357202510**	$83.00	0.336	**357302510**	$83.00	0.288	**357402510**	$83.00
6	0.320	**357103010**	$83.00	0.288	**357203010**	$83.00	0.280	**357303010**	$83.00	0.240	**357403010**	$83.00
7	0.27428	**357103510**	$83.00	0.24686	**357203510**	$83.00	0.240	**357303510**	$83.00	0.20571	**357403510**	$83.00
8	0.240	**357104010**	$83.00	0.216	**357204010**	$83.00	0.210	**357304010**	$83.00	0.180	**357404010**	$83.00
9	0.21333	**357104510**	$83.00	0.192	**357204510**	$83.00	0.18666	**357304510**	$83.00	0.160	**357404510**	$83.00
10	0.192	**357105010**	$83.00	0.1728	**357205010**	$83.00	0.168	**357305010**	$83.00	0.144	**357405010**	$83.00
11	0.17454	**357105510**	$83.00	0.15709	**357205510**	$83.00	0.15273	**357305510**	$83.00	0.13091	**357405510**	$66.00
12	0.160	**357106010**	$83.00	0.144	**357206010**	$83.00	0.140	**357306010**	$83.00	0.120	**357406010**	$66.00
14	0.13714	**357106510**	$66.00	0.12343	**357206510**	$66.00	0.120	**357306510**	$66.00	0.10286	**357406510**	$66.00
16	0.120	**357107010**	$66.00	0.108	**357207010**	$66.00	0.105	**357307010**	$66.00	0.090	**357407010**	$66.00
18	0.10667	**357107510**	$66.00	0.096	**357207510**	$66.00	0.0933	**357307510**	$66.00	0.080	**357407510**	$66.00
20	0.096	**357108010**	$66.00	0.0864	**357208010**	$66.00	0.084	**357308010**	$66.00	0.072	**357408010**	$66.00
22	0.08727	**357108510**	$66.00	0.07855	**357208510**	$66.00	0.07636	**357308510**	$66.00	0.06545	**357408510**	$66.00
24	0.080	**357109010**	$66.00	0.072	**357209010**	$66.00	0.070	**357309010**	$66.00	0.060	**357409010**	$66.00
28	0.06857	**357109510**	$66.00	0.06171	**357209510**	$66.00	0.060	**357309510**	$66.00	0.05143	**357409510**	$66.00
32	0.060	**357110010**	$66.00	0.054	**357210010**	$66.00	0.0525	**357310010**	$66.00	0.045	**357410010**	$66.00
36	0.05333	**357110510**	$66.00	0.048	**357210510**	$66.00	0.04667	**357310510**	$66.00	0.040	**357410510**	$66.00
40	0.048	**357111010**	$66.00	0.0432	**357211010**	$66.00	0.042	**357311010**	$66.00	0.036	**357411010**	$66.00
48	0.040	**357111510**	$66.00	0.036	**357211510**	$66.00	0.035	**357311510**	$66.00	0.030	**357411510**	$66.00
64	0.030	**357112010**	$66.00	0.027	**357212010**	$66.00	0.02625	**357312010**	$66.00	0.0225	**357412010**	$66.00
72	0.02667	**357112510**	$66.00	0.024	**357212510**	$66.00	0.02333	**357312510**	$66.00	0.020	**357412510**	$80.00
80	0.024	**357113010**	$66.00	0.0216	**357213010**	$66.00	0.021	**357313010**	$66.00	0.018	**357413010**	$80.00
96	0.020	**357113510**	$80.00	0.018	**357213510**	$80.00	0.0175	**357313510**	$80.00	0.015	**357413510**	$80.00
100	0.0192	**357114010**	$80.00	0.01728	**357214010**	$80.00	0.0168	**357314010**	$80.00	0.0144	**357414010**	$80.00
120	0.016	**357114510**	$88.00	0.0144	**357214510**	$88.00	0.014	**357314510**	$88.00	0.012	**357414510**	$88.00
128	0.015	**357115010**	$88.00	0.0135	**357215010**	$88.00	0.01312	**357315010**	$88.00	0.01125	**357415010**	$88.00
200	0.0096	**357115510**	$93.00	0.00864	**357215510**	$93.00	0.0084	**357315510**	$93.00	0.0072	**357415510**	$93.00

Standard Pipe Thread Plugs

FOR GAGING STANDARD PIPE & PIPE FITTINGS

Use Vermont Gage Pipe Thread Plugs to check tapered and straight internal pipe threads. Perfect for inspecting standard pipe and pipe fittings. Vermont Gage Pipe Thread Plugs are made to precise Class X tolerances and come with a Certificate of Accuracy. The NPT and NPTF (Dryseal) series includes standard tapered pitch diameters. The NPSM and NPSF series includes standard straight pitch diameters. Add a taperlock handle to create a complete pipe gage assembly.

- ***NIST traceable***
- ***Tool Steel; 60/62 Rc (Cold Stabilized)***
- ***Handles custom marked 1 line (up to 25 characters) included, additional text quoted upon request***
- ***Inch handles – blue***
- ***Certificate of Accuracy included***
- ***See page 111 for Calibration Services***

NPT TAPERED PIPE PLUGS [ASME B1.20.1]

Size	Part No. Plug Gage Member	Price	Part No. Plug Gage Assembly	Price	Handle No.
1/16-27	**401101010**	$115.00	**401101020**	$131.00	1
1/8-27	**401102510**	$90.00	**401102520**	$106.00	2
1/4-18	**401104010**	$95.00	**401104020**	$111.00	3
3/8-18	**401105510**	$100.00	**401105520**	$116.00	3
1/2-14	**401107010**	$115.00	**401107020**	$132.25	4
3/4-14	**401108510**	$130.00	**401108520**	$147.25	4
1-11 1/2	**401110010**	$150.00	**401110020**	$168.50	5
1 1/4-11 1/2	**401111510**	$165.00	**401111520**	$183.50	5
1 1/2-11 1/2	**401113010**	$185.00	**401113020**	$203.50	5
2-11 1/2	**401114510**	$225.00	**401114520**	$243.50	5
2 1/2-8	**401116010**	$270.00	**401116020**	$296.50	6
3-8	**401117510**	$335.00	**401117520**	$361.50	6
3 1/2-8	**401119010**	$505.00	**401119020**	$534.00	7
4-8	**401120510**	$555.00	**401120520**	$584.00	7
5-8	**401122010**	$745.00	**401122020**	$774.00	7
6-8	**401123510**	$930.00	**401123520**	$959.00	7

Standard Pipe Thread Plugs

NPTF TAPERED PIPE PLUGS [ASME B1.20.5]

Size	Basic					Plain 6-Step				Handle
	Part No. L-1	Part No. L-3	Price	L-1 / L-3 Assembly	Price	Part No. Member	Price	Part No. Assembly	Price	No.
1/16-27	**411101010**	**411101020**	$150.00	**411101030**	$315.00	**411101070**	$245.00	**411101080**	$261.00	1
1/8-27	**411102510**	**411102520**	$115.00	**411102530**	$245.00	**411102570**	$245.00	**411102580**	$261.00	2
1/4-18	**411104010**	**411104020**	$122.00	**411104030**	$260.00	**411104070**	$245.00	**411104080**	$261.00	3
3/8-18	**411105510**	**411105520**	$150.00	**411105530**	$315.00	**411105570**	$245.00	**411105580**	$261.00	3
1/2-14	**411107010**	**411107020**	$172.00	**411107030**	$361.00	**411107070**	$248.00	**411107080**	$265.00	4
3/4-14	**411108510**	**411108520**	$186.00	**411108530**	$390.00	**411108570**	$268.00	**411108580**	$285.00	4
1-11 1/2	**411110010**	**411110020**	$212.00	**411110030**	$441.00	**411110070**	$285.00	**411110080**	$303.00	5
1 1/4-11 1/2	**411111510**	**411111520**	$236.00	**411111530**	$491.00	**411111570**	$313.00	**411111580**	$330.00	5
1 1/2-11 1/2	**411113010**	**411113020**	$262.00	**411113030**	$542.00	**411113070**	$344.00	**411113080**	$362.00	5
2-11 1/2	**411114510**	**411114520**	$324.00	**411114530**	$666.00	**411114570**	$468.00	**411114580**	$486.00	5
2 1/2-8	**411116010**	**411116020**	$468.00	**411116030**	$965.00	**411116070**	$700.00	**411116080**	$726.00	6
3-8	**411117510**	**411117520**	$530.00	**411117530**	$1,090.00	**411117570**	$770.00	**411117580**	$795.00	6

NPSM STRAIGHT PIPE PLUGS [ASME B1.20.1]

Size	Pitch Dia. Go Member 2B	Pitch Dia. NoGo Member 2B	Part No. Go Member 2B	Part No. NoGo Member 2B	Price	Part No. Go/NoGo Assembly 2B	Price	Handle No.
1/8-27	0.3736	0.3783	**421102510**	**421102520**	$133.00	**421102530**	$280.00	2
1/4-18	0.4916	0.4974	**421104010**	**421104020**	$133.00	**421104030**	$280.00	3
3/8-18	0.6270	0.6329	**421105510**	**421105520**	$140.00	**421105530**	$295.00	3
1/2-14	0.7784	0.7851	**421107010**	**421107020**	$140.00	**421107030**	$296.00	4
3/4-14	0.9889	0.9958	**421108510**	**421108520**	$167.00	**421108530**	$350.00	4
1-11 1/2	1.2386	1.2462	**421110010**	**421110020**	$175.00	**421110030**	$367.00	5
1 1/4-11 1/2	1.5834	1.5912	**421111510**	**421111520**	$210.00	**421111530**	$444.00	5 1/2
1 1/2-11 1/2	1.8223	1.8302	**421113010**	**421113020**	$244.00	**421113030**	$513.00	5 1/2
2-11 1/2	2.2963	2.3044	**421114510**	**421114520**	$281.00	**421114530**	$590.00	6
2 1/2-8	2.7622	2.7720	**421116010**	**421116020**	$306.00	**421116030**	$645.00	7
3-8	3.3885	3.3984	**421117510**	**421117520**	$377.00	**421117530**	$785.00	7

NPSF STRAIGHT PIPE PLUGS

Size	Pitch Dia. Go Member 2B	Pitch Dia. NoGo Member 2B	Part No. Go Member 2B	Part No. NoGo Member 2B	Price	Part No. Go/NoGo Assembly 2B	Price	Handle No.
1/8-27	0.3692	0.3727	**431102510**	**431102520**	Price Upon Request	**431102530**	Price Upon Request	2
1/4-18	0.4852	0.4904	**431104010**	**431104020**		**431104030**		3
3/8-18	0.6205	0.6257	**431105510**	**431105520**		**431105530**		3
1/2-14	0.7700	0.7767	**431107010**	**431107020**		**431107030**		4
3/4-14	0.9805	0.9872	**431108510**	**431108520**		**431108530**		4
1-11 1/2	1.2284	1.2365	**431110010**	**431110020**		**431110030**		5

Standard Pipe Thread Rings

FOR GAGING STANDARD PIPE & PIPE FITTINGS

Use Vermont Gage Pipe Thread Rings to check tapered and straight external pipe threads. Perfect for inspecting standard pipe and pipe fittings. The NPT and NPTF (Dryseal) series includes standard tapered pitch diameters. The NPSM series includes standard straight pitch diameters.

- ***NIST traceable***
- ***Tool Steel; 60/62 Rc***
- ***Certificate of Accuracy included***
- ***See page 111 for Calibration Services***

NPT TAPERED PIPE RINGS [ASME B1.20.1]

Size	Part No. Ring Gage Member	Price
1/16-27	**441101010**	$225.00
1/8-27	**441102510**	$160.00
1/4-18	**441104010**	$175.00
3/8-18	**441105510**	$196.00
1/2-14	**441107010**	$218.00
3/4-14	**441108510**	$248.00
1-11 1/2	**441110010**	$281.00
1 1/4-11 1/2	**441111510**	$297.00
1 1/2-11 1/2	**441113010**	$362.00
2-11 1/2	**441114510**	$435.00
2 1/2-8	**441116010**	$515.00
3-8	**441117510**	$625.00
3 1/2-8	**441119010**	$878.00
4-8	**441120510**	$1,015.00
5-8	**441122010**	$1,195.00
6-8	**441123510**	$1,435.00

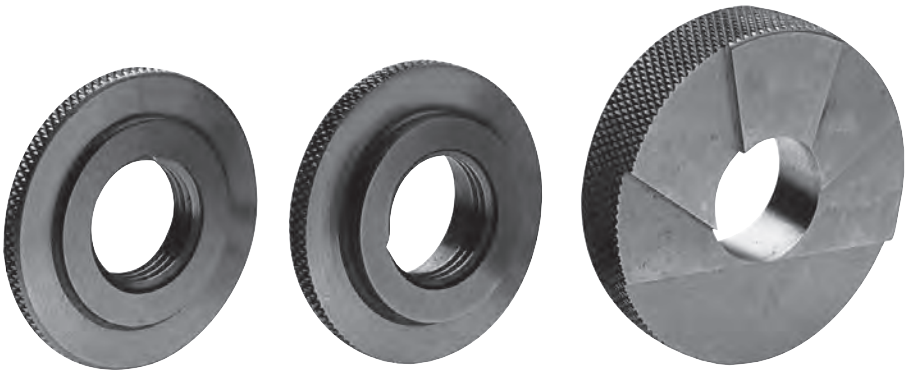

Standard Pipe Thread Rings

NPTF TAPERED PIPE RINGS [ASME B1.20.5]

Size	Part No. L-1	Price	Part No. L-2	Price	Part No. Plain 6-Step	Price
1/16-27	**451101010**	$238.00	**451101020**	$335.00	**451101070**	$390.00
1/8-27	**451102510**	$175.00	**451102520**	$326.00	**451102570**	$390.00
1/4-18	**451104010**	$195.00	**451104020**	$334.00	**451104070**	$390.00
3/8-18	**451105510**	$208.00	**451105520**	$354.00	**451105570**	$390.00
1/2-14	**451107010**	$220.00	**451107020**	$362.00	**451107070**	$390.00
3/4-14	**451108510**	$258.00	**451108520**	$405.00	**451108570**	$435.00
1-11 1/2	**451110010**	$290.00	**451110020**	$435.00	**451110070**	$454.00
1 1/4-11 1/2	**451111510**	$310.00	**451111520**	$473.00	**451111570**	$492.00
1 1/2-11 1/2	**451113010**	$378.00	**451113020**	$529.00	**451113070**	$542.00
2-11 1/2	**451114510**	$454.00	**451114520**	$608.00	**451114570**	$625.00
2 1/2-8	**451116010**	$536.00	**451116020**	$731.00	**451116070**	$745.00
3-8	**451117510**	$675.00	**451117520**	$850.00	**451117570**	$900.00

NPSM STRAIGHT PIPE RINGS [ASME B1.20.1]

Size	Pitch Dia. Go Ring 2A	Pitch Dia. NoGo Ring 2A	Part No. Go Ring 2A	Part No. NoGo Ring 2A	Price	Part No. Go/NoGo Ring Set 2A	Price	Part No. Go Set Plug 2A	Part No. NoGo Set Plug 2A	Price	Part No. Go/NoGo Set Plug 2A	Price
1/8-27	0.3725	0.3689	**461102510**	**461102520**	$390.00	**461102530**	$782.00	**461102540**	**461102550**	$195.00	**461102560**	$407.00
1/4-18	0.4903	0.4859	**461104010**	**461104020**	$347.00	**461104030**	$693.00	**461104040**	**461104050**	$195.00	**461104060**	$407.00
3/8-18	0.6256	0.6211	**461105510**	**461105520**	$366.00	**461105530**	$732.00	**461105540**	**461105550**	$203.00	**461105560**	$421.00
1/2-14	0.7769	0.7718	**461107010**	**461107020**	$371.00	**461107030**	$743.00	**461107040**	**461107050**	$208.00	**461107060**	$433.00
3/4-14	0.9873	0.9820	**461108510**	**461108520**	$378.00	**461108530**	$756.00	**461108540**	**461108550**	$233.00	**461108560**	$483.00
1-11 1/2	1.2369	1.2311	**461110010**	**461110020**	$410.00	**461110030**	$820.00	**461110040**	**461110050**	$252.00	**461110060**	$522.00
1 1/4-11 1/2	1.5816	1.5756	**461111510**	**461111520**	$504.00	**461111530**	$1,008.00	**461111540**	**461111550**	$302.00	**461111560**	$621.00
1 1/2-11 1/2	1.8205	1.8144	**461113010**	**461113020**	$529.00	**461113030**	$1,058.00	**461113040**	**461113050**	$347.00	**461113060**	$711.00
2-11 1/2	2.2944	2.2882	**461114510**	**461114520**	$650.00	**461114530**	$1,300.00	**461114540**	**461114550**	$397.00	**461114560**	$813.00
2 1/2-8	2.7600	2.7526	**461116010**	**461116020**	$732.00	**461116030**	$1,465.00	**461116040**	**461116050**	$468.00	**461116060**	$962.00
3-8	3.3862	3.3786	**461117510**	**461117520**	$900.00	**461117530**	$1,800.00	**461117540**	**461117550**	$525.00	**461117560**	$1,075.00

Standard Jobber Drill & Reamer Blanks

GENERAL PRECISION GROUND BLANKS FOR UNLIMITED USES

Specifically made as blanks for precision drills and reamers, Vermont Gage Blanks have been used for many purposes. Over the years, Vermont Gage HSS Blanks have been used as shafts, arbors, guide rods, rollers, gages, alignment pins, punches, knock-out pins, as well as for stock in the manufacturing of specialty tools and instruments. With tight dimensional tolerances, Vermont Gage Drill & Reamer Blanks are perfect for any project needing precise finished ground stock.

- ***Drill Blank tolerances:***
  Up to .5000" (-.0002" or -.005mm)
  from .5001" to .6250" (-.0003" or -.008mm)
  from .6251" to 1.0000" (-.0005" or -.013mm)
- ***Reamer Blank tolerances:***
  up to .5000" (+.0002" or +.005mm)
  from .5001" to .6250" (+.0003" or +.008mm)
  from .6251" to 1.0000" (+.0005" or +.013mm)
- ***Inch and Metric diameter sizes***
- ***High Speed Tool Steel; 62/65 Rc***
- ***Jobber lengths***
- ***10 microinch finish or better***
- ***Marked with size on blanks over 0.100"***
- ***Only sold in package quantities:***
  up to .1250" – 12 pcs. per package
  from .1251" to .3750" – 6 pcs. per package
  from .3751" to .6250" – 3 pcs. per package
  from .6251" up – packaged individually

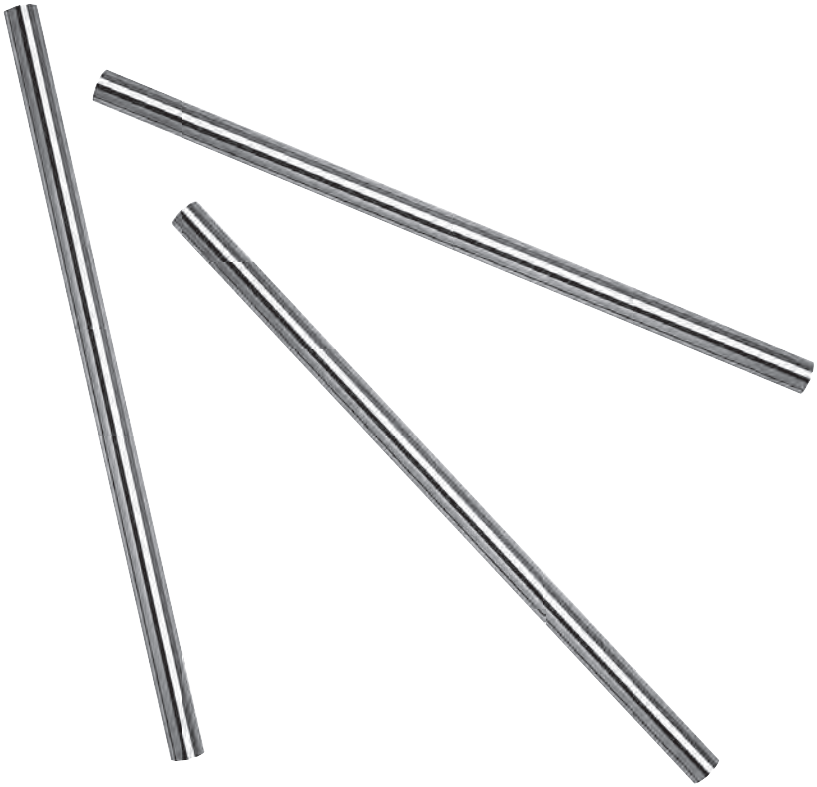

Standard Jobber Drill & Reamer Blanks

INCH - FRACTIONAL SIZES

Size	Decimal	Jobber Length	Part No. Drill Blanks	Part No. Reamer Blanks	Price Each
1/64"	.0156"	3/4"	**501101560**	**502101560**	$3.25
1/32"	.0312"	1 3/8"	**501103120**	**502103120**	$3.25
3/64"	.0469"	1 3/4"	**501104690**	**502104690**	$3.25
1/16"	.0625"	1 7/8"	**501106250**	**502106250**	$3.25
5/64"	.0781"	2"	**501107810**	**502107810**	$3.25
3/32"	.0937"	2 1/4"	**501109370**	**502109370**	$3.25
7/64"	.1094"	2 5/8"	**501110940**	**502110940**	$3.25
1/8"	.1250"	2 3/4"	**501112500**	**502112500**	$3.25
9/64"	.1406"	2 7/8"	**501114060**	**502114060**	$3.25
5/32"	.1562"	3 1/8"	**501115620**	**502115620**	$4.00
11/64"	.1719"	3 1/4"	**501117190**	**502117190**	$4.00
3/16"	.1875"	3 1/2"	**501118750**	**502118750**	$4.00
13/64"	.2031"	3 5/8"	**501120310**	**502120310**	$5.25
7/32"	.2187"	3 3/4"	**501121870**	**502121870**	$5.50
15/64"	.2344"	3 7/8"	**501123440**	**502123440**	$5.50
1/4"	.2500"	4"	**501125000**	**502125000**	$6.50
17/64"	.2656"	4 1/8"	**501126560**	**502126560**	$7.00
9/32"	.2812"	4 1/4"	**501128120**	**502128120**	$7.25
19/64"	.2969"	4 3/8"	**501129690**	**502129690**	$8.00
5/16"	.3125"	4 1/2"	**501131250**	**502131250**	$8.25
21/64"	.3281"	4 5/8"	**501132810**	**502132810**	$9.00
11/32"	.3438"	4 3/4"	**501134380**	**502134380**	$10.00
23/64"	.3594"	4 7/8"	**501135940**	**502135940**	$11.00
3/8"	.3750"	5"	**501137500**	**502137500**	$11.75
25/64"	.3906"	5 1/8"	**501139060**	**502139060**	$12.50
13/32"	.4062"	5 1/4"	**501140620**	**502140620**	$13.50
27/64"	.4219"	5 3/8"	**501142190**	**502142190**	$14.75
7/16"	.4375"	5 1/2"	**501143750**	**502143750**	$16.75
29/64"	.4531"	5 5/8"	**501145310**	**502145310**	$17.25
15/32"	.4688"	5 3/4"	**501146880**	**502146880**	$17.50
31/64"	.4844"	5 7/8"	**501148440**	**502148440**	$20.00
1/2"	.5000"	6"	**501150000**	**502150000**	$21.00
33/64"	.5156"	6"	**501151560**	**502151560**	$29.50
17/32"	.5312"	6"	**501153120**	**502153120**	$29.50
35/64"	.5469"	6"	**501154690**	**502154690**	$29.50
9/16"	.5625"	6"	**501156250**	**502156250**	$30.75
37/64"	.5781"	6"	**501157810**	**502157810**	$35.00
19/32"	.5937"	6"	**501159370**	**502159370**	$35.00
39/64"	.6094"	6"	**501160940**	**502160940**	$35.00
5/8"	.6250"	6"	**501162500**	**502162500**	$35.00
41/64"	.6406"	6"	**501164060**	**502164060**	$40.50
21/32"	.6562"	6"	**501165620**	**502165620**	$40.50
43/64"	.6719"	6"	**501167190**	**502167190**	$44.00
11/16"	.6875"	6"	**501168750**	**502168750**	$44.00
45/64"	.7031"	6"	**501170310**	**502170310**	$45.75
23/32"	.7187"	6"	**501171870**	**502171870**	$45.75
47/64"	.7344"	6"	**501173440**	**502173440**	$47.25
3/4"	.7500"	6"	**501175000**	**502175000**	$47.25

INCH - FRACTIONAL SIZES (CONTINUED)

Size	Decimal	Jobber Length	Part No. Drill Blanks	Part No. Reamer Blanks	Price Each
49/64"	.7656"	6"	**501176560**	**502176560**	$50.75
25/32"	.7812"	6"	**501178120**	**502178120**	$50.75
51/64"	.7969"	6"	**501179690**	**502179690**	$53.50
13/16"	.8125"	6"	**501181250**	**502181250**	$53.50
53/64"	.8281"	6"	**501182810**	**502182810**	$58.00
27/32"	.8437"	6"	**501184370**	**502184370**	$58.00
55/64"	.8594"	6"	**501185940**	**502185940**	$62.75
7/8"	.8750"	6"	**501187500**	**502187500**	$62.75
57/64"	.8906"	6"	**501189060**	**502189060**	$67.50
29/32"	.9062"	6"	**501190620**	**502190620**	$67.50
59/64"	.9219"	6"	**501192190**	**502192190**	$71.50
15/16"	.9375"	6"	**501193750**	**502193750**	$71.50
61/64"	.9531"	6"	**501195310**	**502195310**	$77.00
31/32"	.9688"	6"	**501196880**	**502196880**	$77.00
63/64"	.9844"	6"	**501198440**	**502198440**	$81.50
1"	1.0000"	6"	**501100000**	**502100000**	$81.50

INCH - LETTER SIZES

Size	Decimal	Jobber Length	Part No. Drill Blanks	Part No. Reamer Blanks	Price Each
A	.2340"	3 7/8"	**501223400**	**502223400**	$6.50
B	.2380"	4"	**501223800**	**502223800**	$6.50
C	.2420"	4"	**501224200**	**502224200**	$6.50
D	.2460"	4"	**501224600**	**502224600**	$6.50
E	.2500"	4"	**501225000**	**502225000**	$7.00
F	.2570"	4 1/8"	**501225700**	**502225700**	$7.50
G	.2610"	4 1/8"	**501226100**	**502226100**	$7.50
H	.2660"	4 1/8"	**501226600**	**502226600**	$7.50
I	.2720"	4 1/8"	**501227200**	**502227200**	$8.00
J	.2770"	4 1/8"	**501227700**	**502227700**	$8.00
K	.2810"	4 1/4"	**501228100**	**502228100**	$8.00
L	.2900"	4 1/4"	**501229000**	**502229000**	$8.00
M	.2950"	4 3/8"	**501229500**	**502229500**	$8.75
N	.3020"	4 3/8"	**501230200**	**502230200**	$8.75
O	.3160"	4 1/2"	**501231600**	**502231600**	$9.00
P	.3230"	4 5/8"	**501232300**	**502232300**	$9.75
Q	.3320"	4 3/4"	**501233200**	**502233200**	$9.75
R	.3390"	4 3/4"	**501233900**	**502233900**	$10.75
S	.3480"	4 7/8"	**501234800**	**502234800**	$11.75
T	.3580"	4 7/8"	**501235800**	**502235800**	$11.75
U	.3680"	5"	**501236800**	**502236800**	$13.00
V	.3770"	5"	**501237700**	**502237700**	$13.00
W	.3860"	5 1/8"	**501238600**	**502238600**	$13.50
X	.3970"	5 1/8"	**501239700**	**502239700**	$13.50
Y	.4040"	5 1/4"	**501240400**	**502240400**	$14.75
Z	.4130"	5 1/4"	**501241300**	**502241300**	$14.75

Standard Jobber Drill & Reamer Blanks

INCH - NUMBER SIZES

Size	Decimal	Jobber Length	Part No. Drill Blanks	Part No. Reamer Blanks	Price Each
#97	.0059"	3/4"	**501300590**	**502300590**	$6.00
#96	.0063"	3/4"	**501300630**	**502300630**	$6.00
#95	.0067"	3/4"	**501300670**	**502300670**	$6.00
#94	.0071"	3/4"	**501300710**	**502300710**	$6.00
#93	.0075"	3/4"	**501300750**	**502300750**	$6.00
#92	.0079"	3/4"	**501300790**	**502300790**	$6.00
#91	.0083"	3/4"	**501300830**	**502300830**	$6.00
#90	.0087"	3/4"	**501300870**	**502300870**	$6.00
#89	.0091"	3/4"	**501300910**	**502300910**	$6.00
#88	.0095"	3/4"	**501300950**	**502300950**	$6.00
#87	.0100"	3/4"	**501301000**	**502301000**	$6.00
#86	.0105"	3/4"	**501301050**	**502301050**	$6.00
#85	.0110"	3/4"	**501301100**	**502301100**	$6.00
#84	.0115"	3/4"	**501301150**	**502301150**	$6.00
#83	.0120"	3/4"	**501301200**	**502301200**	$6.00
#82	.0125"	3/4"	**501301250**	**502301250**	$6.00
#81	.0130"	3/4"	**501301300**	**502301300**	$6.00
#80	.0135"	3/4"	**501301350**	**502301350**	$3.25
#79	.0145"	3/4"	**501301450**	**502301450**	$3.25
#78	.0160"	7/8"	**501301600**	**502301600**	$3.25
#77	.0180"	7/8"	**501301800**	**502301800**	$3.25
#76	.0200"	7/8"	**501302000**	**502302000**	$3.25
#75	.0210"	1"	**501302100**	**502302100**	$3.25
#74	.0225"	1"	**501302250**	**502302250**	$3.25
#73	.0240"	1 1/8"	**501302400**	**502302400**	$3.25
#72	.0250"	1 1/8"	**501302500**	**502302500**	$3.25
#71	.0260"	1 1/4"	**501302600**	**502302600**	$3.25
#70	.0280"	1 1/4"	**501302800**	**502302800**	$3.25
#69	.0292"	1 3/8"	**501302920**	**502302920**	$3.25
#68	.0310"	1 3/8"	**501303100**	**502303100**	$3.25
#67	.0320"	1 3/8"	**501303200**	**502303200**	$3.25
#66	.0330"	1 3/8"	**501303300**	**502303300**	$3.25
#65	.0350"	1 1/2"	**501303500**	**502303500**	$3.25
#64	.0360"	1 1/2"	**501303600**	**502303600**	$3.25
#63	.0370"	1 1/2"	**501303700**	**502303700**	$3.25
#62	.0380"	1 1/2"	**501303800**	**502303800**	$3.25
#61	.0390"	1 5/8"	**501303900**	**502303900**	$3.25
#60	.0400"	1 5/8"	**501304000**	**502304000**	$3.25
#59	.0410"	1 5/8"	**501304100**	**502304100**	$3.25
#58	.0420"	1 5/8"	**501304200**	**502304200**	$3.25
#57	.0430"	1 3/4"	**501304300**	**502304300**	$3.25
#56	.0465"	1 3/4"	**501304650**	**502304650**	$3.25
#55	.0520"	1 7/8"	**501305200**	**502305200**	$3.25
#54	.0550"	1 7/8"	**501305500**	**502305500**	$3.25
#53	.0595"	1 7/8"	**501305950**	**502305950**	$3.25
#52	.0635"	1 7/8"	**501306350**	**502306350**	$3.25
#51	.0670"	2"	**501306700**	**502306700**	$3.25
#50	.0700"	2"	**501307000**	**502307000**	$3.25
#49	.0730"	2"	**501307300**	**502307300**	$3.25

INCH - NUMBER SIZES [CONTINUED]

Size	Decimal	Jobber Length	Part No. Drill Blanks	Part No. Reamer Blanks	Price Each
#48	.0760"	2"	**501307600**	**502307600**	$3.25
#47	.0785"	2"	**501307850**	**502307850**	$3.25
#46	.0810"	2 1/8"	**501308100**	**502308100**	$3.25
#45	.0820"	2 1/8"	**501308200**	**502308200**	$3.25
#44	.0860"	2 1/8"	**501308600**	**502308600**	$3.25
#43	.0890"	2 1/4"	**501308900**	**502308900**	$3.25
#42	.0935"	2 1/4"	**501309350**	**502309350**	$3.25
#41	.0960"	2 3/8"	**501309600**	**502309600**	$3.25
#40	.0980"	2 3/8"	**501309800**	**502309800**	$3.25
#39	.0995"	2 3/8"	**501309950**	**502309950**	$3.25
#38	.1015"	2 1/2"	**501310150**	**502310150**	$3.25
#37	.1040"	2 1/2"	**501310400**	**502310400**	$3.25
#36	.1065"	2 1/2"	**501310650**	**502310650**	$3.25
#35	.1100"	2 5/8"	**501311000**	**502311000**	$3.25
#34	.1110"	2 5/8"	**501311100**	**502311100**	$3.25
#33	.1130"	2 5/8"	**501311300**	**502311300**	$3.25
#32	.1160"	2 3/4"	**501311600**	**502311600**	$3.25
#31	.1200"	2 3/4"	**501312000**	**502312000**	$3.25
#30	.1285"	2 3/4"	**501312850**	**502312850**	$3.25
#29	.1360"	2 7/8"	**501313600**	**502313600**	$3.25
#28	.1405"	2 7/8"	**501314050**	**502314050**	$3.25
#27	.1440"	3"	**501314400**	**502314400**	$3.25
#26	.1470"	3"	**501314700**	**502314700**	$3.25
#25	.1495"	3"	**501314950**	**502314950**	$3.25
#24	.1520"	3 1/8"	**501315200**	**502315200**	$4.00
#23	.1540"	3 1/8"	**501315400**	**502315400**	$4.00
#22	.1570"	3 1/8"	**501315700**	**502315700**	$4.00
#21	.1590"	3 1/4"	**501315900**	**502315900**	$4.00
#20	.1610"	3 1/4"	**501316100**	**502316100**	$4.00
#19	.1660"	3 1/4"	**501316600**	**502316600**	$4.00
#18	.1695"	3 1/4"	**501316950**	**502316950**	$4.00
#17	.1730"	3 3/8"	**501317300**	**502317300**	$4.50
#16	.1770"	3 3/8"	**501317700**	**502317700**	$4.50
#15	.1800"	3 3/8"	**501318000**	**502318000**	$4.50
#14	.1820"	3 3/8"	**501318200**	**502318200**	$4.50
#13	.1850"	3 1/2"	**501318500**	**502318500**	$4.50
#12	.1890"	3 1/2"	**501318900**	**502318900**	$4.50
#11	.1910"	3 1/2"	**501319100**	**502319100**	$4.50
#10	.1935"	3 5/8"	**501319350**	**502319350**	$5.25
#9	.1960"	3 5/8"	**501319600**	**502319600**	$5.25
#8	.1990"	3 5/8"	**501319900**	**502319900**	$5.25
#7	.2010"	3 5/8"	**501320100**	**502320100**	$5.25
#6	.2040"	3 3/4"	**501320400**	**502320400**	$5.25
#5	.2055"	3 3/4"	**501320550**	**502320550**	$5.50
#4	.2090"	3 3/4"	**501320900**	**502320900**	$5.50
#3	.2130"	3 3/4"	**501321300**	**502321300**	$5.50
#2	.2210"	3 7/8"	**501322100**	**502322100**	$5.50
#1	.2280"	3 7/8"	**501322800**	**502322800**	$5.50

Standard Jobber Drill Blanks

METRIC

Size	Decimal	Jobber Length	Part No. Drill Blanks	Price Each
1.00mm	.0394"	1 5/8"	**501401000**	$4.00
1.05mm	.0413"	1 5/8"	**501401050**	$4.00
1.10mm	.0433"	1 3/4"	**501401100**	$4.00
1.15mm	.0453"	1 3/4"	**501401150**	$4.00
1.20mm	.0472"	1 7/8"	**501401200**	$4.00
1.25mm	.0492"	1 7/8"	**501401250**	$4.00
1.30mm	.0512"	1 7/8"	**501401300**	$4.00
1.35mm	.0531"	1 7/8"	**501401350**	$4.00
1.40mm	.0551"	1 7/8"	**501401400**	$4.00
1.45mm	.0571"	1 7/8"	**501401450**	$4.00
1.50mm	.0591"	1 7/8"	**501401500**	$4.00
1.55mm	.0610"	1 7/8"	**501401550**	$4.00
1.60mm	.0630"	1 7/8"	**501401600**	$4.00
1.65mm	.0650"	2"	**501401650**	$4.00
1.70mm	.0669"	2"	**501401700**	$4.00
1.75mm	.0689"	2"	**501401750**	$4.00
1.80mm	.0709"	2"	**501401800**	$4.00
1.85mm	.0728"	2"	**501401850**	$4.00
1.90mm	.0748"	2"	**501401900**	$4.00
1.95mm	.0768"	2"	**501401950**	$4.00
2.00mm	.0787"	2 1/8"	**501402000**	$4.00
2.05mm	.0807"	2 1/8"	**501402050**	$4.00
2.10mm	.0827"	2 1/8"	**501402100**	$4.00
2.15mm	.0846"	2 1/8"	**501402150**	$4.00
2.20mm	.0866"	2 1/4"	**501402200**	$4.00
2.25mm	.0886"	2 1/4"	**501402250**	$4.00
2.30mm	.0906"	2 1/4"	**501402300**	$4.00
2.35mm	.0925"	2 1/4"	**501402350**	$4.00
2.40mm	.0945"	2 3/8"	**501402400**	$4.00
2.45mm	.0965"	2 3/8"	**501402450**	$4.00
2.50mm	.0984"	2 3/8"	**501402500**	$4.00
2.55mm	.1004"	2 1/2"	**501402550**	$4.00
2.60mm	.1024"	2 1/2"	**501402600**	$4.00
2.65mm	.1043"	2 1/2"	**501402650**	$4.00
2.70mm	.1063"	2 1/2"	**501402700**	$4.00
2.75mm	.1083"	2 5/8"	**501402750**	$4.00
2.80mm	.1102"	2 5/8"	**501402800**	$4.00
2.85mm	.1122"	2 5/8"	**501402850**	$4.00
2.90mm	.1142"	2 3/4"	**501402900**	$4.00
2.95mm	.1161"	2 3/4"	**501402950**	$4.00
3.00mm	.1181"	2 3/4"	**501403000**	$4.00
3.05mm	.1201"	2 3/4"	**501403050**	$4.00
3.10mm	.1220"	2 3/4"	**501403100**	$4.00
3.15mm	.1240"	2 3/4"	**501403150**	$4.00
3.20mm	.1260"	2 3/4"	**501403200**	$4.00
3.25mm	.1280"	2 3/4"	**501403250**	$4.00
3.30mm	.1299"	2 7/8"	**501403300**	$4.00
3.35mm	.1319"	2 7/8"	**501403350**	$4.00
3.40mm	.1339"	2 7/8"	**501403400**	$4.00
3.45mm	.1358"	2 7/8"	**501403450**	$4.00

METRIC [CONTINUED]

Size	Decimal	Jobber Length	Part No. Drill Blanks	Price Each
3.50mm	.1378"	2 7/8"	**501403500**	$4.00
3.55mm	.1398"	2 7/8"	**501403550**	$4.00
3.60mm	.1417"	3"	**501403600**	$4.50
3.65mm	.1437"	3"	**501403650**	$4.50
3.70mm	.1457"	3"	**501403700**	$4.50
3.75mm	.1476"	3"	**501403750**	$4.50
3.80mm	.1496"	3 1/8"	**501403800**	$4.50
3.85mm	.1516"	3 1/8"	**501403850**	$4.50
3.90mm	.1535"	3 1/8"	**501403900**	$4.50
3.95mm	.1555"	3 1/8"	**501403950**	$4.50
4.00mm	.1575"	3 1/4"	**501404000**	$4.50
4.05mm	.1594"	3 1/4"	**501404050**	$4.50
4.10mm	.1614"	3 1/4"	**501404100**	$4.50
4.15mm	.1634"	3 1/4"	**501404150**	$4.50
4.20mm	.1654"	3 1/4"	**501404200**	$4.50
4.25mm	.1673"	3 1/4"	**501404250**	$4.50
4.30mm	.1693"	3 1/4"	**501404300**	$4.50
4.35mm	.1713"	3 3/8"	**501404350**	$5.25
4.40mm	.1732"	3 3/8"	**501404400**	$5.25
4.45mm	.1752"	3 3/8"	**501404450**	$5.25
4.50mm	.1772"	3 3/8"	**501404500**	$5.25
4.55mm	.1791"	3 3/8"	**501404550**	$5.25
4.60mm	.1811"	3 3/8"	**501404600**	$5.25
4.65mm	.1831"	3 1/2"	**501404650**	$5.25
4.70mm	.1850"	3 1/2"	**501404700**	$5.25
4.75mm	.1870"	3 1/2"	**501404750**	$5.25
4.80mm	.1890"	3 1/2"	**501404800**	$5.25
4.85mm	.1909"	3 1/2"	**501404850**	$5.25
4.90mm	.1929"	3 5/8"	**501404900**	$6.50
4.95mm	.1949"	3 5/8"	**501404950**	$6.50
5.00mm	.1968"	3 5/8"	**501405000**	$6.50
5.05mm	.1988"	3 5/8"	**501405050**	$6.50
5.10mm	.2008"	3 5/8"	**501405100**	$6.50
5.15mm	.2028"	3 3/4"	**501405150**	$6.50
5.20mm	.2047"	3 3/4"	**501405200**	$6.50
5.25mm	.2067"	3 3/4"	**501405250**	$6.50
5.30mm	.2087"	3 3/4"	**501405300**	$6.50
5.35mm	.2106"	3 3/4"	**501405350**	$6.50
5.40mm	.2126"	3 3/4"	**501405400**	$6.50
5.45mm	.2146"	3 7/8"	**501405450**	$7.25
5.50mm	.2165"	3 7/8"	**501405500**	$7.25
5.55mm	.2185"	3 7/8"	**501405550**	$7.25
5.60mm	.2205"	3 7/8"	**501405600**	$7.25
5.65mm	.2224"	3 7/8"	**501405650**	$7.25
5.70mm	.2244"	3 7/8"	**501405700**	$7.25
5.75mm	.2264"	3 7/8"	**501405750**	$7.25
5.80mm	.2283"	3 7/8"	**501405800**	$7.25
5.85mm	.2303"	3 7/8"	**501405850**	$7.25
5.90mm	.2323"	3 7/8"	**501405900**	$7.25
5.95mm	.2343"	3 7/8"	**501405950**	$7.25

Standard Jobber Drill Blanks

METRIC [CONTINUED]

Size	Decimal	Jobber Length	Part No. Drill Blanks	Price Each
6.00mm	.2362"	4"	**501406000**	$7.50
6.05mm	.2382"	4"	**501406050**	$7.50
6.10mm	.2402"	4"	**501406100**	$7.50
6.15mm	.2421"	4"	**501406150**	$7.50
6.20mm	.2441"	4"	**501406200**	$7.50
6.25mm	.2461"	4"	**501406250**	$7.50
6.30mm	.2480"	4"	**501406300**	$7.50
6.40mm	.2520"	4 1/8"	**501406400**	$8.00
6.50mm	.2559"	4 1/8"	**501406500**	$8.00
6.60mm	.2598"	4 1/8"	**501406600**	$8.00
6.70mm	.2638"	4 1/8"	**501406700**	$8.00
6.80mm	.2677"	4 1/8"	**501406800**	$8.00
6.90mm	.2717"	4 1/8"	**501406900**	$8.00
7.00mm	.2756"	4 1/8"	**501407000**	$8.00
7.10mm	.2795"	4 1/4"	**501407100**	$8.25
7.20mm	.2835"	4 1/4"	**501407200**	$8.25
7.30mm	.2874"	4 1/4"	**501407300**	$8.25
7.40mm	.2913"	4 3/8"	**501407400**	$8.25
7.50mm	.2953"	4 3/8"	**501407500**	$9.50
7.60mm	.2992"	4 3/8"	**501407600**	$9.50
7.70mm	.3031"	4 1/2"	**501407700**	$9.50
7.80mm	.3071"	4 1/2"	**501407800**	$9.50
7.90mm	.3110"	4 1/2"	**501407900**	$9.50
8.00mm	.3150"	4 1/2"	**501408000**	$9.50
8.10mm	.3189"	4 5/8"	**501408100**	$10.25
8.20mm	.3228"	4 5/8"	**501408200**	$10.25
8.30mm	.3268"	4 5/8"	**501408300**	$10.25
8.40mm	.3307"	4 3/4"	**501408400**	$11.50
8.50mm	.3346"	4 3/4"	**501408500**	$11.50
8.60mm	.3386"	4 3/4"	**501408600**	$11.50
8.70mm	.3425"	4 3/4"	**501408700**	$11.50
8.80mm	.3465"	4 7/8"	**501408800**	$12.50
8.90mm	.3504"	4 7/8"	**501408900**	$12.50
9.00mm	.3543"	4 7/8"	**501409000**	$12.50
9.10mm	.3583"	4 7/8"	**501409100**	$12.50
9.20mm	.3622"	5"	**501409200**	$13.75
9.30mm	.3661"	5"	**501409300**	$13.75
9.40mm	.3701"	5"	**501409400**	$13.75
9.50mm	.3740"	5"	**501409500**	$13.75
9.60mm	.3780"	5 1/8"	**501409600**	$14.50
9.70mm	.3819"	5 1/8"	**501409700**	$14.50
9.80mm	.3858"	5 1/8"	**501409800**	$14.50
9.90mm	.3898"	5 1/8"	**501409900**	$14.50
10.00mm	.3937"	5 1/8"	**501410000**	$14.50
10.10mm	.3976"	5 1/4"	**501410100**	$15.75
10.20mm	.4016"	5 1/4"	**501410200**	$15.75
10.30mm	.4055"	5 1/4"	**501410300**	$15.75
10.40mm	.4094"	5 1/4"	**501410400**	$15.75
10.50mm	.4134"	5 3/8"	**501410500**	$17.25
10.60mm	.4173"	5 3/8"	**501410600**	$17.25

METRIC [CONTINUED]

Size	Decimal	Jobber Length	Part No. Drill Blanks	Price Each
10.70mm	.4212"	5 3/8"	**501410700**	$17.25
10.80mm	.4252"	5 1/2"	**501410800**	$19.50
10.90mm	.4291"	5 1/2"	**501410900**	$19.50
11.00mm	.4331"	5 1/2"	**501411000**	$19.50
11.10mm	.4370"	5 1/2"	**501411100**	$19.50
11.20mm	.4409"	5 5/8"	**501411200**	$20.25
11.30mm	.4449"	5 5/8"	**501411300**	$20.25
11.40mm	.4488"	5 5/8"	**501411400**	$20.25
11.50mm	.4528"	5 5/8"	**501411500**	$20.25
11.60mm	.4567"	5 3/4"	**501411600**	$20.75
11.70mm	.4606"	5 3/4"	**501411700**	$20.75
11.80mm	.4646"	5 3/4"	**501411800**	$20.75
11.90mm	.4685"	5 3/4"	**501411900**	$20.75
12.00mm	.4724"	5 7/8"	**501412000**	$23.50
12.10mm	.4764"	5 7/8"	**501412100**	$23.50
12.20mm	.4803"	5 7/8"	**501412200**	$23.50
12.30mm	.4843"	5 7/8"	**501412300**	$23.50
12.40mm	.4882"	5 7/8"	**501412400**	$23.50
12.50mm	.4921"	6"	**501412500**	$25.00
12.60mm	.4961"	6"	**501412600**	$25.00
12.70mm	.5000"	6"	**501412700**	$25.00
12.80mm	.5039"	6"	**501412800**	$29.25
12.90mm	.5079"	6"	**501412900**	$31.50
13.00mm	.5118"	6"	**501413000**	$34.50
13.50mm	.5315"	6"	**501413500**	$37.25
14.00mm	.5512"	6"	**501414000**	$38.00
14.50mm	.5709"	6"	**501414500**	$41.50
15.00mm	.5906"	6"	**501415000**	$42.00
15.50mm	.6102"	6"	**501415500**	$46.25
16.00mm	.6299"	6"	**501416000**	$47.25
16.50mm	.6496"	6"	**501416500**	$50.50
17.00mm	.6693"	6"	**501417000**	$54.75
17.50mm	.6890"	6"	**501417500**	$56.00
18.00mm	.7087"	6"	**501418000**	$58.75
18.50mm	.7283"	6"	**501418500**	$61.25
19.00mm	.7480"	6"	**501419000**	$61.75
19.50mm	.7677"	6"	**501419500**	$66.00
20.00mm	.7874"	6"	**501420000**	$67.00
20.50mm	.8071"	6"	**501420500**	$68.25
21.00mm	.8268"	6"	**501421000**	$72.75
21.50mm	.8465"	6"	**501421500**	$74.25
22.00mm	.8661"	6"	**501422000**	$76.75
22.50mm	.8858"	6"	**501422500**	$82.25
23.00mm	.9055"	6"	**501423000**	$84.75
23.50mm	.9252"	6"	**501423500**	$86.00
24.00mm	.9449"	6"	**501424000**	$90.25
24.50mm	.9646"	6"	**501424500**	$92.25
25.00mm	.9843"	6"	**501425000**	$97.50
25.40mm	1.0000"	6"	**501425400**	$97.50

Standard Jobber Drill & Reamer Blank Sets

INCH & METRIC BLANKS IN DRILL INDEXES

Indexes come with precision ground jobber length blanks ready for the cutter grinder! All HSS Blanks are heat treated to 62/65 Rc and marked with size. Drill Blanks are precision ground to -.0002" or -.005mm tolerance; Reamer Blanks are precision ground to +.0002" or +.005mm tolerance. When you need a set of custom cutting tools and you want to make them quick and cost effectively, use Vermont Gage Drill & Reamer Blank Sets. There is simply no easier, better, or quicker way to make quality cutting tools.

- ***Drill Blanks (-.0002" or -.005mm) tolerance***
- ***Reamer Blanks (+.0002" or +.005mm) tolerance***
- ***Inch and Metric diameter sizes***
- ***High Speed Tool Steel; 62/65 Rc***
- ***Jobber lengths***
- ***10 microinch finish or better***
- ***Marked with size on blanks over 0.100"***
- ***Packaged in drill index***

BLANKS

Range	Part No. Drill Blank Set	Part No. Reamer Blank Set	Price Each	Part No. Index Only	Price Each
1/16" to 1/2"	511100100	512100100	$290.00	953410100	$26.00
A to Z	511200100	512200100	$290.00	953410200	$26.00
#1 to #60	511300100	512300100	$255.00	953410300	$26.00
#61 to #80	511300200	512300200	$87.00	953410400	$26.00
1.00mm to 7.00mm (.50mm increments)	511500100		$103.00	953410600	$26.00
1.00mm to 10.00mm (.50mm increments)	511500200		$214.00	953410700	$26.00
1.00mm to 13.00mm (.50mm increments)	511500300		$339.00	953410800	$26.00

Standard Long Length Drill Blanks

WHEN YOU NEED A LONGER DRILL BLANK

Vermont Gage stocks fractional inch Drill Blanks in standard 6", 12", 24" and 36" lengths. Each long length HSS Blank is heat treated to 62/65 Rc and precision ground to size. Long Length Blanks are multi-purpose and used wherever precision ground stock is required. When you are looking for economical precision ground stock in long lengths, you can't beat Vermont Gage Long Length Drill Blanks.

- ***Long Length Drill Blank tolerances:***
  6" long (-.0005")
  12" long (-.0005")
  24" long (+/-.001")
  36" long (+/-.001")
- ***Fractional Inch sizes up to 1/2"***
- ***High Speed Tool Steel; 62/65 Rc***
- ***6", 12", 24" and 36" standard lengths***
- ***10 microinch finish or better***
- ***Marked with size on blanks over .100"***
- ***Packaged individually***

INCH - FRACTIONAL SIZES

Size	Decimal	Part No. 6" Long	Price	Part No. 12" Long	Price	Part No. 24" Long	Price	Part No. 36" Long	Price
1/16"	.0625"	**521062510**	$7.25	**521062520**	$10.00	**521062530**	$40.00	**521062540**	$64.00
5/64"	.0781"	**521078110**	$7.25	**521078120**	$10.00	**521078130**	$40.00	**521078140**	$64.00
3/32"	.0937"	**521093710**	$7.25	**521093720**	$10.00	**521093730**	$40.00	**521093740**	$64.00
7/64"	.1094"	**521109410**	$9.25	**521109420**	$15.00	**521109430**	$48.00	**521109440**	$64.00
1/8"	.1250"	**521125010**	$9.25	**521125020**	$15.00	**521125030**	$48.00	**521125040**	$64.00
9/64"	.1406"	**521140610**	$9.25	**521140620**	$16.00	**521140630**	$48.00	**521140640**	$64.00
5/32"	.1562"	**521156210**	$9.25	**521156220**	$16.00	**521156230**	$48.00	**521156240**	$64.00
11/64"	.1719"	**521171910**	$12.75	**521171920**	$21.00	**521171930**	$56.00	**521171940**	$80.00
3/16"	.1875"	**521187510**	$12.75	**521187520**	$21.00	**521187530**	$56.00	**521187540**	$80.00
13/64"	.2031"	**521203110**	$12.75	**521203120**	$21.00	**521203130**	$56.00	**521203140**	$80.00
7/32"	.2187"	**521218710**	$12.75	**521218720**	$21.00	**521218730**	$56.00	**521218740**	$80.00
15/64"	.2344"	**521234410**	$18.50	**521234420**	$27.00	**521234430**	$64.00	**521234440**	$93.00
1/4"	.2500"	**521250010**	$18.50	**521250020**	$27.00	**521250030**	$64.00	**521250040**	$93.00
17/64"	.2656"	**521265610**	$18.50	**521265620**	$27.00	**521265630**	$64.00	**521265640**	$93.00
9/32"	.2812"	**521281210**	$18.50	**521281220**	$27.00	**521281230**	$64.00	**521281240**	$93.00
19/64"	.2969"	**521296910**	$19.75	**521296920**	$32.00	**521296930**	$72.00	**521296940**	$101.00
5/16"	.3125"	**521312510**	$19.75	**521312520**	$32.00	**521312530**	$72.00	**521312540**	$101.00
21/64"	.3281"	**521328110**	$19.75	**521328120**	$32.00	**521328130**	$72.00	**521328140**	$101.00
11/32"	.3438"	**521343810**	$19.75	**521343820**	$32.00	**521343830**	$72.00	**521343840**	$101.00
23/64"	.3594"	**521359410**	$21.00	**521359420**	$39.00	**521359430**	$80.00	**521359440**	$123.00
3/8"	.3750"	**521375010**	$21.00	**521375020**	$39.00	**521375030**	$80.00	**521375040**	$123.00
25/64"	.3906"	**521390610**	$21.00	**521390620**	$39.00	**521390630**	$80.00	**521390640**	$123.00
13/32"	.4062"	**521406210**	$21.00	**521406220**	$39.00	**521406230**	$80.00	**521406240**	$123.00
27/64"	.4219"	**521421910**	$22.75	**521421920**	$40.00	**521421930**	$87.00	**521421940**	$138.00
7/16"	.4375"	**521437510**	$22.75	**521437520**	$40.00	**521437530**	$87.00	**521437540**	$138.00
29/64"	.4531"	**521453110**	$22.75	**521453120**	$40.00	**521453130**	$87.00	**521453140**	$138.00
15/32"	.4688"	**521468810**	$22.75	**521468820**	$40.00	**521468830**	$87.00	**521468840**	$138.00
31/64"	.4844"	**521484410**	$24.00	**521484420**	$48.00	**521484430**	$111.00	**521484440**	$150.00
1/2"	.5000"	**521500010**	$24.00	**521500020**	$48.00	**521500030**	$111.00	**521500040**	$150.00

Standard Cobalt Jobber Drill Blanks

WHEN YOU NEED EXTRA HARDNESS & ABRASION RESISTANCE

Cobalt is used in applications where friction and heat wear out general purpose HSS quickly. Cobalt improves normal and hot hardness. High speed tools made with the material last longer. Vermont Gage manufacturers a standard line of Cobalt Drill Blanks. Each Cobalt Blank is heat treated to 65/68 Rc and precision ground to standard fractional inch sizes. When looking for heavy duty abrasion resistant tool blanks, look no further, specify Vermont Gage Cobalt Blanks.

- ***Drill Blank tolerances:***
  up to .5000" (-.0002")
  from .5001" to .6250" (-.0003")
  form .6251" to 1.0000" (-.0005")
- ***Fractional Inch sizes up to 1.0000"***
- ***Cobalt High Speed Tool Steel; 65/68 Rc***
- ***Jobber lengths***
- ***10 microinch finish or better***
- ***Marked with size on blanks over 0.100"***
- ***Only sold in package quantities:***
  up to .1250" - 12 pcs. per package
  from .1251" to .3750" – 6 pcs. per package
  from .3751" to 6250" – 3 pcs. per package
  from .6251" up – packaged individually

Size	Decimal	Jobber Length	Part No.	Price
1/64"	.0156"	3/4"	**531101560**	$7.00
1/32"	.0312"	1 3/8"	**531101320**	$7.00
3/64"	.0468"	1 3/4"	**531104680**	$7.00
1/16"	.0625"	1 7/8"	**531106250**	$5.00
5/64"	.0781"	2"	**531107810**	$5.00
3/32"	.0937"	2 1/4"	**531109370**	$5.00
7/64"	.1094"	2 5/8"	**531110940**	$5.00
1/8"	.1250"	2 3/4"	**531112500**	$5.00
9/64"	.1406"	2 7/8"	**531114060**	$5.00
5/32"	.1562"	3 1/8"	**531115620**	$7.00
11/64"	.1719"	3 1/4"	**531117190**	$7.00
3/16"	.1875"	3 1/2"	**531118750**	$7.00
13/64"	.2031"	3 5/8"	**531120310**	$9.00
7/32"	.2187"	3 3/4"	**531121870**	$9.00
15/64"	.2344"	3 7/8"	**531123440**	$9.00
1/4"	.2500"	4"	**531125000**	$10.00
9/32"	.2812"	4 1/4"	**531128120**	$12.00
5/16"	.3125"	4 1/2"	**531131250**	$14.00
11/32"	.3438"	4 3/4"	**531134380**	$16.00
3/8"	.3750"	5"	**531137500**	$19.00
13/32"	.4062"	5 1/4"	**531140620**	$21.00
7/16"	.4375"	5 1/2"	**531143750**	$27.00
15/32"	.4688"	5 3/4"	**531146880**	$28.00
1/2"	.5000"	6"	**531150000**	$34.00
9/16"	.5625"	6"	**531156250**	$50.00
5/8"	.6250"	6"	**531162500**	$56.00
11/16"	.6875"	6"	**531168750**	$71.00
3/4"	.7500"	6"	**531175000**	$75.00
13/16"	.8125"	6"	**531181250**	$86.00
7/8"	.8750"	6"	**531187500**	$101.00
15/16"	.9375"	6"	**531193750**	$116.00
1"	1.0000"	6"	**531100000**	$132.00

Custom Blanks up to 18"

CUSTOM BLANKS FOR EVERY NEED

When a standard blank just will not do, Vermont Gage Custom Blanks are just what you need. Used for everything from cutting tool stock to guide rods, each hardened blank is precision ground and cut to your exact dimensions. And even though our Series 55 Blanks are custom made, we offer a select range for quick delivery. All blanks priced in the shaded portions on the following tables are manufactured and shipped within 48 hours.

- ***Tool Blank tolerances:***
  up to .5000" (.0002" or .005mm)
  from .5001" to .6250" (.0003" or .008mm)
  from .6251" to 1.0000" (.0005" or .013mm)
- ***Custom sizes up to 1.0000"***
- ***High Speed Tool Steel; 62/65 Rc***
- ***Custom lengths up to 18"***
- ***10 microinch finish or better***
- ***Marked with size on blanks over 0.100"***
- ***Subject to a 10% over/under production run***
- ***Shaded portions, 48-hour delivery***

How to Order:

55 _ _ _ _ _ 0

Material
[1] Hi Speed Steel

Delivery
[1] Normal Delivery
[2] 48 hr. delivery (availible on shaded items only)

Range

[01] .0311" to .0469"	[0.79mm to 1.19mm]
[02] .0470" to .0625"	[1.20mm to 1.59mm]
[03] .0626" to .0937"	[1.60mm to 2.38mm]
[04] .0938" to .1250"	[2.39mm to 3.18mm]
[05] .1251" to .1562"	[3.19mm to 3.97mm]
[06] .1563" to .1875"	[3.98mm to 4.76mm]
[07] .1876" to .2187"	[4.77mm to 5.55mm]
[08] .2188" to .2500"	[5.56mm to 6.35mm]
[09] .2501" to .2812"	[6.36mm to 7.14mm]
[10] .2813" to .3125"	[7.15mm to 7.94mm]
[11] .3126" to .3437"	[7.95mm to 8.73mm]
[12] .3438" to .3750"	[8.74mm to 9.53mm]
[13] .3751" to .4062"	[9.54mm to 10.32mm]
[14] .4063" to .4375"	[10.33mm to 11.11mm]
[15] .4376" to .4687"	[11.12mm to 11.90mm]
[16] .4688" to .5000"	[11.91mm to 12.70mm]
[17] .5001" to .5312"	[12.71mm to 13.49mm]
[18] .5313" to .5625"	[13.50mm to 14.29mm]
[19] .5626" to .5937"	[14.30mm to 15.08mm]
[20] .5938" to .6250"	[15.09mm to 15.88mm]
[21] .6251" to .6562"	[15.89mm to 16.67mm]
[22] .6563" to .6875"	[16.68mm to 17.46mm]
[23] .6876" to .7187"	[17.47mm to 18.25mm]
[24] .7188" to .7500"	[18.26mm to 19.05mm]
[25] .7501" to .7812"	[19.06mm to 19.84mm]
[26] .7813" to .8125"	[19.85mm to 20.64mm]
[27] .8126" to .8437"	[20.65mm to 21.43mm]
[28] .8438" to .8750"	[21.44mm to 22.23mm]
[29] .8751" to .9062"	[22.24mm to 23.02mm]
[30] .9063" to .9375"	[23.03mm to 23.81mm]
[31] .9376" to .9687"	[23.82mm to 24.60mm]
[32] .9688" to 1.0000"	[24.61mm to 25.40mm]

Direction of Tolerance
[1] Plus Tolerance
[2] Minus Tolerance

Length (Price special lengths as next even length)
[1] Up to 3"
[2] Up to 6"
[3] Up to 9"
[4] Up to 12"
[5] Up to 15"
[6] Up to 18"

Size (Specify diameter and length)
Configure part number and add size of blank
Example: **551208120 - .2500" x 6" Long**

Custom Blanks up to 18"

Range	Length up to	Price 1 pc.	Price 2 to 5 pcs.	Price 6 to 11 pcs.	Price 12 to 23 pcs.	Price 24 pcs. and Up
.0311" to .0469"	3"	$33.50	$26.00	$19.25	$11.50	$4.75
.79mm to 1.19mm	6"	$34.25	$26.75	$19.50	$11.75	$5.25
[01]	9"	$35.00	$27.50	$20.00	$13.00	$6.00
	12"	$36.00	$29.00	$22.00	$14.00	$7.00
	15"	$38.00	$31.00	$23.00	$16.00	$9.00
	18"	$40.00	$33.00	$25.00	$18.00	$11.00
.0470" to .0625"	3"	$33.25	$25.75	$17.50	$10.75	$4.00
1.20mm to 1.59mm	6"	$34.50	$26.75	$18.50	$11.50	$5.00
[02]	9"	$35.00	$27.50	$20.00	$13.00	$6.00
	12"	$36.00	$29.00	$22.00	$14.00	$7.00
	15"	$38.00	$31.00	$23.00	$16.00	$9.00
	18"	$40.00	$33.00	$25.00	$18.00	$11.00
.0626" to .0937"	3"	$29.25	$21.75	$14.75	$11.25	$4.25
1.60mm to 2.38mm	6"	$33.50	$26.75	$19.25	$11.50	$4.75
[03]	9"	$35.00	$27.50	$20.00	$13.00	$6.00
	12"	$36.00	$29.00	$22.00	$14.00	$7.00
	15"	$38.00	$31.00	$23.00	$16.00	$9.00
	18"	$40.00	$33.00	$25.00	$18.00	$11.00
.0938" to .1250"	3"	$33.50	$26.75	$19.25	$11.50	$4.75
2.39mm to 3.18mm	6"	$35.00	$27.75	$20.50	$13.00	$6.50
[04]	9"	$37.00	$29.50	$22.00	$14.50	$8.00
	12"	$39.00	$31.00	$24.00	$16.00	$10.00
	15"	$42.00	$35.00	$27.00	$20.00	$13.00
	18"	$44.00	$37.00	$29.00	$22.00	$16.00
.1251" to .1562"	3"	$33.50	$26.75	$19.25	$11.50	$5.00
3.19mm to 3.97mm	6"	$35.00	$27.50	$20.50	$13.00	$6.50
[05]	9"	$37.00	$29.50	$22.00	$14.50	$8.00
	12"	$39.00	$32.00	$24.00	$17.00	$11.00
	15"	$43.00	$35.00	$28.00	$21.00	$15.00
	18"	$45.00	$37.00	$30.00	$23.00	$17.00
.1563" to .1875"	3"	$35.00	$27.50	$20.50	$13.00	$6.50
3.98mm to 4.76mm	6"	$37.50	$30.50	$23.00	$15.50	$8.75
[06]	9"	$39.50	$32.50	$25.00	$17.50	$11.00
	12"	$43.00	$35.00	$28.00	$20.00	$14.00
	15"	$46.00	$39.00	$31.00	$23.00	$18.00
	18"	$48.00	$41.00	$33.00	$25.00	$20.00
.1876" to .2187"	3"	$35.00	$27.50	$20.50	$13.00	$6.50
4.77mm to 5.55mm	6"	$37.50	$30.50	$23.00	$15.50	$8.75
[07]	9"	$39.50	$32.50	$25.00	$17.50	$11.00
	12"	$43.00	$35.00	$28.00	$20.00	$14.00
	15"	$46.00	$39.00	$31.00	$23.00	$18.00
	18"	$49.00	$43.00	$35.00	$27.00	$22.00
.2188" to .2500"	3"	$36.50	$29.00	$21.50	$13.75	$7.50
5.56mm to 6.35mm	6"	$41.50	$34.50	$27.00	$19.25	$13.00
[08]	9"	$42.50	$35.00	$28.00	$20.50	$14.50
	12"	$46.00	$39.00	$32.00	$24.00	$19.00
	15"	$52.00	$44.00	$37.00	$29.00	$24.00
	18"	$56.00	$48.00	$41.00	$33.00	$29.00

*Price special lengths at next even length.
*No cut-off charge!

Custom Blanks up to 18"

Range	Length up to	Price 1 pc.	Price 2 to 5 pcs.	Price 6 to 11 pcs.	Price 12 to 23 pcs.	Price 24 pcs. and Up
.2501" to .2812"	3"	$36.75	$29.50	$21.75	$14.50	$8.25
6.36mm to 7.14mm	6"	$41.50	$34.50	$27.00	$19.25	$13.00
[09]	9"	$42.50	$35.00	$27.50	$20.50	$14.50
	12"	$47.00	$39.00	$32.00	$24.00	$19.00
	15"	$52.00	$45.00	$37.00	$29.00	$24.00
	18"	$58.00	$50.00	$43.00	$35.00	$31.00
.2813" to .3125"	3"	$37.50	$29.50	$22.75	$15.00	$8.50
7.15mm to 7.94mm	6"	$44.25	$36.75	$29.50	$21.50	$16.25
[10]	9"	$45.50	$38.50	$31.00	$23.00	$17.50
	12"	$50.00	$43.00	$35.00	$27.00	$22.00
	15"	$56.00	$48.00	$41.00	$33.00	$29.00
	18"	$59.00	$52.00	$45.00	$37.00	$33.00
.3126" to .3437"	3"	$37.50	$29.50	$22.75	$15.00	$8.50
7.95mm to 8.73mm	6"	$44.25	$36.75	$29.25	$21.50	$16.25
[11]	9"	$45.50	$38.50	$31.00	$23.00	$17.50
	12"	$50.00	$43.00	$35.00	$27.00	$22.00
	15"	$56.00	$48.00	$41.00	$33.00	$29.00
	18"	$59.00	$52.00	$45.00	$37.00	$33.00
.3438" to .3750"	3"	$38.50	$31.25	$23.75	$16.25	$10.25
8.74mm to 9.53mm	6"	$43.50	$36.50	$29.00	$21.25	$15.50
[12]	9"	$49.00	$41.00	$33.50	$26.00	$21.00
	12"	$53.00	$46.00	$39.00	$31.00	$26.00
	15"	$61.00	$54.00	$47.00	$39.00	$35.00
	18"	$65.00	$58.00	$51.00	$43.00	$39.00
.3751" to .4062"	3"	$38.50	$31.25	$23.75	$16.25	$10.25
9.54mm to 10.32mm	6"	$43.50	$36.50	$29.00	$21.25	$15.50
[13]	9"	$49.00	$41.00	$33.50	$26.00	$21.00
	12"	$53.00	$46.00	$39.00	$31.00	$26.00
	15"	$61.00	$54.00	$47.00	$39.00	$35.00
	18"	$65.00	$58.00	$51.00	$43.00	$39.00
.4063" to .4375"	3"	$39.00	$31.50	$24.75	$17.00	$10.50
10.33mm to 11.11mm	6"	$44.75	$37.75	$30.50	$22.25	$17.25
[14]	9"	$50.50	$43.00	$35.50	$28.00	$23.00
	12"	$55.00	$47.00	$40.00	$32.00	$28.00
	15"	$65.00	$58.00	$51.00	$43.00	$39.00
	18"	$69.00	$62.00	$55.00	$46.00	$44.00
.4376" to .4687"	3"	$39.00	$31.50	$24.75	$17.00	$10.50
11.12mm to 11.90mm	6"	$44.75	$37.75	$30.50	$22.50	$17.50
[15]	9"	$50.50	$43.00	$35.50	$28.00	$23.00
	12"	$55.00	$47.00	$39.00	$32.00	$27.00
	15"	$65.00	$58.00	$51.00	$43.00	$39.00
	18"	$69.00	$62.00	$55.00	$46.00	$44.00
.4688" to .5000"	3"	$40.50	$33.25	$25.75	$18.25	$12.50
11.91mm to 12.70mm	6"	$46.50	$39.00	$31.50	$24.00	$18.50
[16]	9"	$53.00	$46.00	$38.50	$30.50	$26.00
	12"	$59.00	$52.00	$45.00	$37.00	$33.00
	15"	$71.00	$64.00	$57.00	$48.00	$46.00
	18"	$75.00	$68.00	$61.00	$52.00	$50.00

*Price special lengths at next even length.
*No cut-off charge!

Custom Blanks up to 18"

Range	Length up to	Price 1 pc.	Price 2 to 5 pcs.	Price 6 to 11 pcs.	Price 12 to 23 pcs.	Price 24 pcs. and Up
.5001" to .5312"	6"	$46.50	$39.00	$31.50	$24.00	$18.50
12.71mm to 13.49mm	9"	$53.00	$46.00	$38.50	$30.50	$26.00
[17]	12"	$61.00	$54.00	$47.00	$39.00	$35.00
.5313" to .5625"	6"	$50.00	$42.50	$35.00	$27.25	$22.75
13.50mm to 14.29mm	9"	$59.00	$51.50	$44.50	$36.00	$32.50
[18]	12"	$66.00	$59.00	$51.00	$43.00	$40.00
.5626" to .5937"	6"	$51.00	$43.50	$36.50	$28.25	$23.50
14.30mm to 15.08mm	9"	$59.00	$51.50	$44.50	$36.00	$32.50
[19]	12"	$66.00	$58.00	$51.00	$43.00	$40.00
.5938" to .6250"	6"	$52.00	$43.50	$36.50	$28.25	$23.50
15.09mm to 15.88mm	9"	$59.00	$52.00	$44.50	$36.50	$32.50
[20]	12"	$69.00	$62.00	$55.00	$46.00	$44.00
.6251" to .6562"	6"	$52.00	$43.50	$36.50	$28.25	$23.50
15.89mm to 16.67mm	9"	$59.00	$52.00	$44.50	$36.50	$32.50
[21]	12"	$69.00	$62.00	$55.00	$46.00	$44.00
.6563" to .6875"	6"	$53.00	$46.00	$38.50	$30.50	$26.00
16.68mm to 17.46mm	9"	$63.00	$56.00	$48.50	$40.50	$37.00
[22]	12"	$75.00	$68.00	$61.00	$52.00	$50.00
.6876" to .7187"	6"	$55.25	$48.00	$40.50	$32.50	$26.00
17.47mm to 18.25mm	9"	$64.50	$57.50	$50.00	$42.00	$39.00
[23]	12"	$77.00	$70.00	$63.00	$54.00	$52.00
.7188" to .7500"	6"	$55.25	$48.00	$40.50	$32.50	$28.25
18.26mm to 19.05mm	9"	$64.50	$58.00	$50.50	$42.50	$39.00
[24]	12"	$79.00	$72.00	$65.00	$56.00	$54.00
.7501" to .7812"	6"	$55.25	$48.50	$40.50	$32.50	$28.25
19.06mm to 19.84mm	9"	$64.25	$58.00	$50.50	$42.50	$39.00
[25]	12"	$81.00	$74.00	$67.00	$58.00	$57.00
.7813" to .8125"	6"	$57.25	$50.00	$42.50	$34.50	$30.25
19.85mm to 20.64mm	9"	$66.00	$56.00	$48.50	$40.50	$43.50
[26]	12"	$83.00	$76.00	$69.00	$60.00	$59.00
.8126" to .8437"	6"	$59.00	$52.00	$44.50	$36.50	$32.50
20.65mm to 21.43mm	9"	$71.00	$64.00	$56.50	$48.00	$45.50
[27]	12"	$85.00	$78.00	$70.00	$62.00	$61.00
.8438" to .8750"	6"	$59.00	$52.00	$44.50	$36.50	$32.50
21.44mm to 22.23mm	9"	$73.00	$65.50	$57.50	$49.50	$47.50
[28]	12"	$88.00	$80.00	$72.00	$64.00	$63.00
.8751" to .9062"	6"	$60.50	$53.50	$46.50	$37.00	$34.50
22.24mm to 23.02mm	9"	$74.50	$69.50	$60.50	$50.00	$48.00
[29]	12"	$89.00	$84.00	$74.00	$66.00	$65.00
.9063" to .9375"	6"	$63.00	$55.75	$48.50	$40.25	$36.75
23.03mm to 23.81mm	9"	$77.50	$70.00	$62.50	$54.00	$52.00
[30]	12"	$91.00	$84.00	$76.00	$68.00	$67.00
.9376" to .9687"	6"	$64.25	$58.00	$50.25	$42.25	$38.75
23.82mm to 24.60mm	9"	$78.50	$71.50	$64.50	$56.00	$54.00
[31]	12"	$93.00	$86.00	$78.00	$70.00	$69.00
.9688" to 1.0000"	6"	$67.25	$59.75	$51.25	$44.50	$41.25
24.61mm to 25.40mm	9"	$80.50	$73.50	$66.50	$58.00	$56.50
[32]	12"	$95.00	$88.00	$81.00	$72.00	$72.00

*Price special lengths at next even length.
*No cut-off charge!

Accessories

GAGE BOXES & LIBRARIES

Range	Dimensions	Part No.	Price
Small Poly (Tan)	**9 1/4" x 7" x 2 1/2"**	**953210100**	$35.00
Large Poly (Tan)	**16 1/4" x 11 1/4" x 2 1/2"**	**953210200**	$35.00
Small Poly (Black)	**9 1/4" x 7" x 2 1/2"**	**953240100**	$35.00
Large Poly (Black)	**16 1/4" x 11 1/4" x 2 1/2"**	**953240200**	$35.00
4-Drawer Metal	**19" x 12" x 12 1/2"**	**953230200**	$575.00
6-Drawer Metal	**19" x 12" x 17 3/8"**	**953230300**	$750.00

POLY BOXES & INSERTS

GAGE BOX INSERTS

Size	Part No.	Price
.006" to .060"	**953010100**	$35.00
.0065" to .0605"	**953020100**	$35.00
.011" to .060"	**953010200**	$35.00
.0115" to .0605"	**953020200**	$35.00
.011" to .250"	**953010300**	$35.00
.0115" to .2505"	**953020300**	$35.00
.061" to .250"	**953010400**	$35.00
.0615" to .2505"	**953020400**	$35.00
.251" to .500"	**953010500**	$35.00
.2515" to .5005"	**953020500**	$35.00
.501" to .625"	**953010600**	$35.00
.5015" to .6255"	**953020600**	$35.00
.626" to .750"	**953010700**	$35.00
.6265" to .7505"	**953020700**	$35.00
.751" to .832"	**953010800**	$35.00
.7515" to .8325"	**953020800**	$35.00
.833" to .916"	**953010900**	$35.00
.8335" to .9165"	**953020900**	$35.00
.917" to 1.000"	**953011000**	$35.00
.9175" to 1.0005"	**953021000**	$35.00
0.20mm to 1.28mm	**953030100**	$35.00
0.21mm to 1.29mm	**953040100**	$35.00
1.30mm to 4.98mm	**953030200**	$35.00
1.31mm to 4.99mm	**953040200**	$35.00
5.00mm to 9.98mm	**953030300**	$35.00
5.01mm to 9.99mm	**953040300**	$35.00
10.00mm to 13.98mm	**953030400**	$35.00
10.01mm to 13.99mm	**953040400**	$35.00
14.00mm to 16.48mm	**953030500**	$35.00
14.01mm to 16.49mm	**953040500**	$35.00
16.50mm to 18.98mm	**953030600**	$35.00
16.51mm to 18.99mm	**953040600**	$35.00
19.00mm to 20.98mm	**953030700**	$35.00
19.01mm to 20.99mm	**953040700**	$35.00
21.00mm to 22.48mm	**953030800**	$35.00
21.01mm to 22.49mm	**953040800**	$35.00
22.50mm to 23.98mm	**953030900**	$35.00
22.51mm to 23.99mm	**953040900**	$35.00
24.00mm to 25.48mm	**953031000**	$35.00
24.01mm to 25.49mm	**953041000**	$35.00
Small to Large Conversion	**953041100**	$35.00

Accessories

REVERSIBLE GAGE HANDLES

Range	Single-End Handle (includes 1 Collet)			Double-End Handle (includes 2 Collets)			Replacement Collets Only		
	Handle No.	Part No.	Price	Handle No.	Part No.	Price	Part No. Go/Green	Part No. NoGo/Red	Price
Inch									
.0040"-.0750"	1WSE	**951010100**	$10.00	1WDE	**951020100**	$10.75	**951050100**	**951060100**	$4.00
.0751"-.1800"	2WSE	**951010200**	$10.00	2WDE	**951020200**	$10.75	**951050200**	**951060200**	$4.00
.1801"-.2810"	3WSE	**951010300**	$12.00	3WDE	**951020300**	$12.75	**951050300**	**951060300**	$4.00
.2811"-.4060"	4WSE	**951010400**	$13.00	4WDE	**951020400**	$13.50	**951050400**	**951060400**	$4.00
.4061"-.5100"	5WSE	**951010500**	$16.00	5WDE	**951020500**	$17.00	**951050500**	**951060500**	$4.00
.5101"-.6350"	6WSE	**951010600**	$19.00	6WDE	**951020600**	$20.00	**951050600**	**951060600**	$4.50
.6351"-.7600"	7WSE	**951010700**	$21.00	7WDE	**951020700**	$22.00	**951050700**	**951060700**	$4.50
.7601"-1.0100"	8WSE	**951010800**	$30.00	8WDE	**951020800**	$31.00	**951050800**	**951060800**	$4.50
Metric									
.10mm to 1.90mm	1WSE	**951030100**	$10.00	1WDE	**951040100**	$10.75	**951050100**	**951060100**	$4.00
1.91mm to 4.56mm	2WSE	**951030200**	$10.00	2WDE	**951040200**	$10.75	**951050200**	**951060200**	$4.00
4.57mm to 7.14mm	3WSE	**951030300**	$12.00	3WDE	**951040300**	$12.75	**951050300**	**951060300**	$4.00
7.15mm to 10.30mm	4WSE	**951030400**	$13.00	4WDE	**951040400**	$13.50	**951050400**	**951060400**	$4.00
10.31mm to 12.94mm	5WSE	**951030500**	$16.00	5WDE	**951040500**	$17.00	**951050500**	**951060500**	$4.00
12.95mm to 16.12mm	6WSE	**951030600**	$19.00	6WDE	**951040600**	$20.00	**951050600**	**951060600**	$4.50
16.13mm to 19.30mm	7WSE	**951030700**	$21.00	7WDE	**951040700**	$22.00	**951050700**	**951060700**	$4.50
19.31mm to 25.64mm	8WSE	**951030800**	$30.00	8WDE	**951040800**	$31.00	**951050800**	**951060800**	$4.50

Inch Handles - Blue, Metric Handles - Yellow.
Single End Handle (1WSE - 8WSE) supplied with Green Collet, Red Collet available upon request.

BUSHINGS FOR REVERSIBLE HANDLES

Bushing Prices	
Up to .5100"	$4.00
.5101" & Up	$5.50

Range	Order No.	Range	Order No.	Range	Order No.
.0040"-.0060"	**951200100**	.1661"-.1730"	**951203000**	.4501"-.4650"	**951205900**
.0061"-.0100"	**951200200**	.1731"-.1800"	**951203100**	.4651"-.4800"	**951206000**
.0101"-.0130"	**951200300**	.1801"-.1880"	**951203200**	.4801"-.4950"	**951206100**
.0131"-.0150"	**951200400**	.1881"-.1960"	**951203300**	.4951"-.5100"	**951206200**
.0151"-.0200"	**951200500**	.1961"-.2040"	**951203400**	.5101"-.5320"	**951206300**
.0201"-.0250"	**951200600**	.2041"-.2120"	**951203500**	.5321"-.5470"	**951206400**
.0251"-.0300"	**951200700**	.2121"-.2200"	**951203600**	.5471"-.5630"	**951206500**
.0301"-.0350"	**951200800**	.2201"-.2280"	**951203700**	.5631"-.5790"	**951206600**
.0351"-.0400"	**951200900**	.2281"-.2360"	**951203800**	.5791"-.5940"	**951206700**
.0401"-.0450"	**951201000**	.2361"-.2440"	**951203900**	.5941"-.6100"	**951206800**
.0451"-.0500"	**951201100**	.2441"-.2520"	**951204000**	.6101"-.6250"	**951206900**
.0501"-.0550"	**951201200**	.2521"-.2610"	**951204100**	.6251"-.6350"	**951207000**
.0551"-.0600"	**951201300**	.2611"-.2710"	**951204200**	.6351"-.6560"	**951207100**
.0601"-.0650"	**951201400**	.2711"-.2810"	**951204300**	.6561"-.6720"	**951207200**
.0651"-.0700"	**951201500**	.2811"-.2910"	**951204400**	.6721"-.6880"	**951207300**
.0701"-.0750"	**951201600**	.2911"-.3010"	**951204500**	.6881"-.7040"	**951207400**
.0751"-.0820"	**951201700**	.3011"-.3110"	**951204600**	.7041"-.7190"	**951207500**
.0821"-.0890"	**951201800**	.3111"-.3210"	**951204700**	.7191"-.7350"	**951207600**
.0891"-.0960"	**951201900**	.3211"-.3310"	**951204800**	.7351"-.7500"	**951207700**
.0961"-.1030"	**951202000**	.3311"-.3410"	**951204900**	.7501"-.7600"	**951207800**
.1031"-.1100"	**951202100**	.3411"-.3510"	**951205000**	.7601"-.7810"	**951207900**
.1101"-.1170"	**951202200**	.3511"-.3610"	**951205100**	.7811"-.8120"	**951208000**
.1171"-.1240"	**951202300**	.3611"-.3710"	**951205200**	.8121"-.8430"	**951208100**
.1241"-.1310"	**951202400**	.3711"-.3820"	**951205300**	.8431"-.8750"	**951208200**
.1311"-.1380"	**951202500**	.3821"-.3940"	**951205400**	.8751"-.9060"	**951208300**
.1380"-.1450"	**951202600**	.3941"-.4060"	**951205500**	.9061"-.9370"	**951208400**
.1451"-.1520"	**951202700**	.4061"-.4200"	**951205600**	.9371"-.9680"	**951208500**
.1521"-.1590"	**951202800**	.4201"-.4350"	**951205700**	.9681"-1.0000"	**951208600**
.1591"-.1660"	**951202900**	.4351"-.4500"	**951205800**		

DOUBLE END HANDLE

SINGLE END HANDLE

COLLETS

BUSHINGS

ACCESSORIES

Accessories

TAPERLOCK GAGE HANDLES

Range	Double-End Handle		
	Handle No.	Part No.	Price
Inch			
.0590"-.1050"	000	**951410100**	$17.25
.1051"-.1500"	00	**951410200**	$16.00
.1501"-.2300"	0	**951410300**	$16.00
.2301"-.3650"	1	**951410400**	$16.00
.3651"-.5100"	2	**951410500**	$16.00
.5101"-.8250"	3	**951410600**	$16.00
.8251"-1.1350"	4	**951410700**	$17.25
1.1351"-1.5100"	5	**951410800**	$18.50
Metric			
1.50mm to 2.67mm	000	**951420100**	$17.25
2.68mm to 3.81mm	00	**951420200**	$16.00
3.82mm to 5.84mm	0	**951420300**	$16.00
5.85mm to 9.27mm	1	**951420400**	$16.00
9.28mm to 12.95mm	2	**951420500**	$16.00
12.96mm to 20.95mm	3	**951420600**	$16.00
20.96mm to 28.83mm	4	**951420700**	$17.25
28.84mm to 38.35mm	5	**951420800**	$18.50

Inch Handles - Blue, Metric Handles - Yellow

TRILOCK GAGE HANDLES [BOLTS INCLUDED]

Range	Single-End Handle			Double-End Handle		
	Handle No.	Part No.	Price	Handle No.	Part No.	Price
Inch						
.7600"-.9470"	2 1/2SE	**951610100**	$18.50	2 1/2DE	**951620100**	$20.00
.9471"-1.1350"	3 1/2SE	**951610200**	$20.00	3 1/2DE	**951620200**	$21.50
1.1351"-1.5100"	4 1/2SE	**951610300**	$21.50	4 1/2DE	**951620300**	$22.50
1.5101"-2.0100"	5 1/2SE	**951610400**	$24.00	5 1/2DE	**951620400**	$25.50
2.0101"-2.5100"	6SE	**951610500**	$26.50	6DE	**951620500**	$28.00
2.5101"-8.0100"	7SE	**951610600**	$29.00	7DE	**951620600**	$32.00
Metric						
19.30mm to 24.05mm	2 1/2SE	**951630100**	$18.50	2 1/2DE	**951640100**	$20.00
24.06mm to 28.83mm	3 1/2SE	**951630200**	$20.00	3 1/2DE	**951640200**	$21.50
28.84mm to 38.35mm	4 1/2SE	**951630300**	$21.50	4 1/2DE	**951640300**	$22.50
38.36mm to 51.05mm	5 1/2SE	**951630400**	$24.00	5 1/2DE	**951640400**	$25.50
51.06mm to 63.75mm	6SE	**951630500**	$26.50	6DE	**951640500**	$28.00
63.76mm to 203.45mm	7SE	**951630600**	$29.00	7DE	**951640600**	$32.00

Inch Handles - Blue, Metric Handles - Yellow

UNIVERSAL GAGE HANDLE

- ***Save setup time and change gages in seconds***
- ***Quick acting thumbscrew grips tightly***
- ***Go/NoGo clearly marked***
- ***Manufactured from durable lightweight aluminum***
- ***Self-contained, needs no bushings***
- ***Holds gages from .0310" to .5000"***

Range	Part No.	Price
.0310" to .5000"	**951000100**	$24.00

Accessories

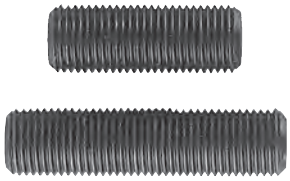

TIE RODS

Range	Part No.	Price
1 3/8"	952210100	$6.50
2"	952210200	$7.00
2 1/2"	952210300	$7.50
3 1/8"	952210400	$10.00

GRIPS FOR MASTER SETTING DISCS

Range	Blank No.	Part No.	Price
		Hard Grips	
Inch			
.1500"-.2300"	0	952010100	$4.15
.2301"-.3650"	1	952010200	$5.80
.3651"-.5100"	2	952010300	$7.15
.5101"-.8250"	3	952010400	$7.70
.8251"-1.1350"	4	952010500	$9.35
1.1351"-1.5100"	5	952010600	$11.00
1.5101"-2.5100"	6	952010700	$13.75
2.5101"-6.0100"	7	952010800	$21.45
Metric			
3.81mm to 5.84mm	0	952030100	$4.15
5.85mm to 9.27mm	1	952030200	$5.80
9.28mm to 12.95mm	2	952030300	$7.15
12.96mm to 20.95mm	3	952030400	$7.70
20.96mm to 28.83mm	4	952030500	$9.35
28.84mm to 38.35mm	5	952030600	$11.00
38.36mm to 63.75mm	6	952030700	$13.75
63.76mm to 152.65mm	7	952030800	$21.45

THREAD RING GAGE HOLDERS

Range	Blank No.	Part No.	Price
Inch			
.0590"-.2300"	1T	952610100	$22.50
.2301"-.3650"	2T	952610200	$25.00
.3651"-.5100"	3T	952610300	$27.00
.5101"-.8250"	4T	952610400	$32.50
.8251"-1.1350"	5T	952610500	$45.00
1.1351"-1.5100"	6T	952610600	$58.00
Metric			
1.50mm to 5.84mm	1T	952620100	$22.50
5.85mm to 9.27mm	2T	952620200	$25.00
9.28mm to 12.95mm	3T	952620300	$27.00
12.96mm to 20.95mm	4T	952620400	$32.50
20.96mm to 28.83mm	5T	952620500	$45.00
28.84mm to 38.35mm	6T	952620600	$58.00

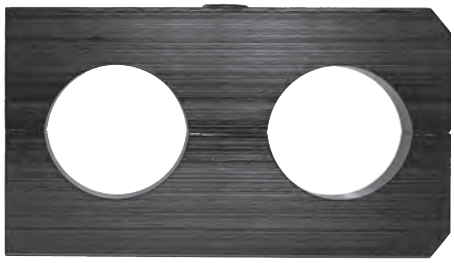

PLAIN RING GAGE HOLDERS

Range	Blank No.	Part No.	Price
Inch			
.0500"-.1500"	0	951810100	$105.00
.1501"-.2300"	0	951810200	$105.00
.2301"-.3650"	1	951810300	$105.00
.3651"-.5100"	2	951810400	$105.00
.5101"-.8250"	3	951810500	$132.00
.8251"-1.1350"	4	951810600	$132.00
1.1351"-1.5100"	5	951810700	$132.00
Metric			
1.27mm to 3.81mm	0	951820100	$105.00
3.82mm to 5.84mm	0	951820200	$105.00
5.85mm to 9.27mm	1	951820300	$105.00
9.28mm to 12.95mm	2	951820400	$105.00
12.96mm to 20.95mm	3	951820500	$132.00
20.96mm to 28.83mm	4	951820600	$132.00
28.84mm to 38.35mm	5	951820700	$132.00

Class ZZ Set & Library Calibrations

PIN GAGE SET CALIBRATIONS

Vermont Gage is pleased to offer Calibration Services for pin gage sets. This service is available for both new and used gage sets.

Your calibration readings are taken using a laser micrometer. The published repeatability specification for our lab micrometer is +/-.000005''. Traceable to NIST through SI units.

Your gages are inspected per ***ANSI/ ASME B89.1.5***. Refer to paragraph 6.1.7 – ***Recalibration of .0025/.005mm (.0001/.0002 in.) Pins or Pin Sets.*** "Due to typical usage and economics, recalibration of .0025/.005mm (.0001/.0002 in.) tolerance pins or pin sets requires only two measurements, 6.35mm (1/4") from each end, unless otherwise specified."

All gage readings along with size nominals are printed on a single gage set calibration. A pass/fail marker is also printed to quickly identify the status of each gage.

- ***New and used gage set calibrations***
- ***Laser precision measurements***
- ***2) 4-place readings on Inch Sets***
- ***2) 3-place readings on Metric Sets***
- ***Pass/Fail Marker for each gage***
- ***1 Calibration Certificate***
- ***NIST traceable***
- ***Competitive prices***

INCH SETS [.001 INCREMENTS]

Range	Part No. New Gages	Price	Part No. Used Gages	Price
.0060" to .0600"	971202130	$54.00	971202230	$66.00
.0065" to .0605"	971402130	$54.00	971402230	$66.00
.0110" to .0600"	971204130	$50.00	971204230	$60.00
.0115" to .0605"	971404130	$50.00	971404230	$60.00
.0110" to .2500"	971206130	$225.00	971206230	$255.00
.0115" to .2505"	971406130	$225.00	971406230	$255.00
.0610" to .2500"	971208130	$188.00	971208230	$200.00
.0615" to .2505"	971408130	$188.00	971408230	$200.00
.2510" to .5000"	971210130	$248.00	971210230	$275.00
.2515" to .5005"	971410130	$248.00	971410230	$275.00
.5010" to .6250"	971212130	$164.00	971212230	$192.00
.5015" to .6255"	971412130	$164.00	971412230	$192.00
.6260" to .7500"	971214130	$164.00	971214230	$192.00
.6265" to .7505"	971414130	$162.00	971414230	$194.00
.7510" to .8320"	971216130	$114.00	971216230	$132.00
.7515" to .8325"	971416130	$114.00	971416230	$132.00
.8330" to .9160"	971218130	$114.00	971218230	$132.00
.8335" to .9165"	971418130	$114.00	971418230	$132.00
.9170" to 1.0000"	971220130	$114.00	971220230	$132.00
.9175" to 1.0005"	971420130	$114.00	971420230	$132.00
.0060" to .6250"	971222130	$644.00	971222230	$715.00
.0065" to .6255"	971422130	$644.00	971422230	$715.00
.0060" to .8320"	971224130	$920.00	971224230	$1,036.00
.0065" to .8325"	971424130	$920.00	971424230	$1,036.00
.0060" to 1.0000"	971226130	$1,160.00	971226230	$1,472.00
.0065" to 1.0005"	971426130	$1,160.00	971426230	$1,472.00
.0110" to .5005"	971227130	$815.00	971227230	$1,230.00
.0110" to .6250"	971228130	$640.00	971228230	$862.00
.0115" to .6255"	971428130	$640.00	971428230	$862.00
.0110" to .6255"	971229130	$1,325.00	971229230	$1,725.00
.0110" to .7500"	971230130	$640.00	971230230	$830.00
.0115" to .7505"	971430130	$640.00	971430230	$830.00
.0110" to .9160"	971232130	$820.00	971232230	$1,065.00
.0115" to .9165"	971432130	$820.00	971432230	$1,065.00
.0110" to 1.0000"	971234130	$910.00	971234230	$1,190.00
.0115" to 1.0005"	971434130	$910.00	971434230	$1,190.00
.0610" to .6255"	971235130	$1,170.00	971235230	$1,582.00
.0610" to .7500"	971236130	$600.00	971236230	$775.00
.0615" to .7505"	971436130	$600.00	971436230	$775.00
.0610" to .9160"	971238130	$782.00	971238230	$1,015.00
.0615" to .9165"	971438130	$782.00	971438230	$1,015.00
.0610" to 1.0000"	971240130	$872.00	971240230	$1,135.00
.0615" to 1.0005"	971440130	$872.00	971440230	$1,135.00
.2510" to .8320"	971242130	$558.00	971242230	$715.00
.2515" to .8325"	971442130	$558.00	971442230	$715.00
.2510" to 1.0000"	971244130	$728.00	971244230	$960.00
.2515" to 1.0005"	971444130	$728.00	971444230	$960.00
.5010" to .9160"	971246130	$466.00	971246230	$605.00
.5015" to .9165"	971446130	$466.00	971446230	$605.00
.5010" to 1.0000"	971248130	$558.00	971248230	$725.00
.5015" to 1.0005"	971448130	$558.00	971448230	$725.00
.6260" to 1.0000"	971250130	$418.00	971250230	$545.00
.6265" to 1.0005"	971450130	$418.00	971450230	$545.00
.7510" to 1.0000"	971252130	$274.00	971252230	$372.00
.7515" to 1.0005"	971452130	$274.00	971452230	$372.00

Class ZZ Set & Library Calibrations

METRIC SETS [0.02mm INCREMENTS]

Range	Part No. New Gages	Price	Part No. Used Gages	Price
0.20mm to 1.28mm	**971602130**	$59.00	**971602230**	$76.00
0.21mm to 1.29mm	**971802130**	$59.00	**971802230**	$76.00
1.30mm to 4.98mm	**971604130**	$162.00	**971604230**	$218.00
1.31mm to 4.99mm	**971804130**	$162.00	**971804230**	$218.00
5.00mm to 9.98mm	**971606130**	$248.00	**971606230**	$332.00
5.01mm to 9.99mm	**971806130**	$248.00	**971806230**	$332.00
10.00mm to 13.98mm	**971608130**	$188.00	**971608230**	$260.00
10.01mm to 13.99mm	**971808130**	$188.00	**971808230**	$260.00
14.00mm to 16.48mm	**971610130**	$162.00	**971610230**	$228.00
14.01mm to 16.49mm	**971810130**	$162.00	**971810230**	$228.00
16.50mm to 18.98mm	**971612130**	$162.00	**971612230**	$228.00
16.51mm to 18.99mm	**971812130**	$162.00	**971812230**	$228.00
19.00mm to 20.98mm	**971614130**	$130.00	**971614230**	$174.00
19.01mm to 20.99mm	**971814130**	$130.00	**971814230**	$174.00
21.00mm to 22.48mm	**971616130**	$100.00	**971616230**	$138.00
21.01mm to 22.49mm	**971816130**	$100.00	**971816230**	$138.00
22.50mm to 23.98mm	**971618130**	$100.00	**971618230**	$138.00
22.51mm to 23.99mm	**971818130**	$100.00	**971818230**	$138.00
24.00mm to 25.48mm	**971620130**	$100.00	**971620230**	$138.00
24.01mm to 25.49mm	**971820130**	$100.00	**971820230**	$138.00
0.20mm to 13.98mm	**971622130**	$656.00	**971622230**	$890.00
0.21mm to 13.99mm	**971822130**	$656.00	**971822230**	$890.00
0.20mm to 18.98mm	**971624130**	$985.00	**971624230**	$1,345.00
0.21mm to 18.99mm	**971824130**	$985.00	**971824230**	$1,345.00
0.20mm to 22.48mm	**971626130**	$1,200.00	**971626230**	$1,605.00
0.21mm to 22.49mm	**971826130**	$1,200.00	**971826230**	$1,605.00
0.20mm to 25.48mm	**971628130**	$1,410.00	**971628230**	$1,905.00
0.21mm to 25.49mm	**971828130**	$1,410.00	**971828230**	$1,905.00
1.30mm to 16.48mm	**971630130**	$765.00	**971630230**	$1,030.00
1.31mm to 16.49mm	**971830130**	$765.00	**971830230**	$1,030.00
1.30mm to 20.98mm	**971632130**	$1,065.00	**971632230**	$1,430.00
1.31mm to 20.99mm	**971832130**	$1,065.00	**971832230**	$1,430.00
1.30mm to 23.98mm	**971634130**	$1,150.00	**971634230**	$1,525.00
1.31mm to 23.99mm	**971834130**	$1,150.00	**971834230**	$1,525.00
1.30mm ot 25.48mm	**971636130**	$1,250.00	**971636230**	$1,665.00
1.31mm ot 25.49mm	**971836130**	$1,250.00	**971836230**	$1,665.00

Cylindrical Certifications

VERMONT GAGE CALIBRATIONS

Vermont Gage is proud to offer ISO/IEC 17025 A2LA accredited certifications and non-accredited certifications for Cylindrical fixed limit gages. Our calibration lab meets or exceeds the dimensional, humidity and temperature requirements per ISO/IEC 17025 and ANSI/NCSL Z540.1. We encourage you to visit the A2LA website to view the scope of our accreditations for both of our labs

Vermont Gage
10 Precision Lane
Swanton, Vermont 05488

ACCREDITED
CERT#2514.01

Certificate of Accredited Calibration

Customer:
XYZCompany
Your Street
Your Town VT 00000
US

Performed at:
Vermont Gage
10 Precision Lane, Swanton, VT 05488
Tel: 800-421-0914
Email: sales@vermontgage.com

Certification ID:	161404	Date of Issue:	1/8/2025
Customer PO:	Sample Cert	**Control#:**	100061404
End User PO:	End User PO	**Unit Of Measure:**	Inches
Re-Cal Date:		**Specifications Derived From:**	ASME B89.1.5-1988
Gage Condition:	New Plug		
Gage Description:	STL ZZ GO/NG REV ASSY W ACC 0.2500 IN/0.2510 IN		

Comments:

	Specified Size	Tolerance ZZ		Actual Readings 0Deg	90Deg
Gage:	0.250000	+ 0.000200	**Front**	0.250200	0.250100
Date Of Performance:	1/8/2025		**Center**	0.250100	0.250200
Temperature:	68.2 ° F		**Back**	0.250000	0.250000
Gage:	0.251000	- 0.000200	**Front**	0.251000	0.250800
Date Of Performance:	1/8/2025		**Center**	0.250800	0.251000
Temperature:	68.2 ° F		**Back**	0.250900	0.250900

Note: Measurement taken at center and 1/16" from end of top and bottom radius or chamfer. Toe 'O degree' reading is taken through the axis of the size. Marked end represents front of gage.

Calibration Procedure ID: OLP 721.6 C-SMIC-0000000000032 Measurement Uncertainty: 10 µin

This is to certify that the gage described above has been calibrated and is traceable through an unbroken chain of calibrations to SI units through NIST. Calibration requirements are in compliance with ISO/IEC 17025:2017 & ANSI Z-540.1. Results relate only to gage calibrated.

Expanded uncertainty expressed at a 95% confidence level using a coverage factor of K=2. Relative humidity is <50%. The stated calibration results have been determined to be in accordance with the laboratory's terms of accreditation unless otherwise stated in the report. The calibrated items are in no way approved or endorsed by A2LA.

This certificate is neither a contract nor a contractual representation. The manufacturer's responsibilities due to any defects or inaccuracies in any gage or in the certificate, shall in no event nor for any cause whatsoever, exceed the purchase or price of the pertinent gage(s).

Certified By: Vaughn Rock, Certifier **Inspected By: Ashley Charbonneau, Inspector**

This certificate shall not be reproduced except in full, without written approval of Vermont Gage.

Accredited ISO/IEC 17025:2017

Page 1 of 1

SAMPLE

QUALITY POLICY FOR CALIBRATION LAB

The calibration lab is committed to achieving customer satisfaction by implementing a quality system compliant to the ISO/IEC 17025 standard. Through its quality system, the lab intends to provide accurate calibrations, timely deliveries, and efficient customer services.

This policy is implemented at Vermont Gage's Swanton, Vermont facility. The lab provides calibrations for fixed limit gages. This includes product produced at this facility, purchased gages, as well as, calibrations of used gages supplied by our customers.

All laboratory personnel, including management and technicians, are required to familiarize themselves with the quality and operational procedures generated by compliance with the ISO/IEC 17025 standard.

Certificate #2514.01
To view our Scope of Accreditation, go to:
http://www.a2la.org/scopepdf/2514-01.pdf

Cylindrical Certifications

PLAIN PLUG GAGES

Range	Type of Certificate	Part No. New Gages	Price	Part No. Used Gages	Price	Number of Readings
.0040" to .0100"	Calibration	**973011100**	$18.00	**973011200**	$24.00	0° Front, Center, Back
	Accredited	**973011110**	$30.00	**973011210**	$48.00	0° Front, Center, Back 90° Front, Center, Back
.0101" to 6.0000"	Calibration	**973011120**	$15.00	**973011220**	$24.00	0° Front, Center, Back
	Accredited	**973011130**	$26.00	**973011230**	$44.00	0° Front, Center, Back 90° Front, Center, Back

PLAIN RING GAGES

Range	Type of Certificate	Part No. New Gages	Price	Part No. Used Gages	Price	Number of Readings
.0600" to 2.0000"	Calibration	**973511120**	$15.00	**973511220**	$24.00	0° Front, Center, Back
	Accredited	**973511130**	$26.00	**973511230**	$44.00	0° Front, Center, Back 90° Front, Center, Back
2.0001" to 6.0000"	Calibration	**973512120**	$18.00	**973512220**	$24.00	0° Front, Center, Back
	Accredited	**973512130**	$30.00	**973512230**	$48.00	0° Front, Center, Back 90° Front, Center, Back
6.0001" to 12.2600"	Calibration	**973513130**	$22.00	**973513230**	$31.00	0° Front, Center, Back 90° Front, Center, Back

MASTER SETTING DISCS

Range	Type of Certificate	Part No. New Gages	Price	Part No. Used Gages	Price	Number of Readings
.1500" to 2.0000"	Calibration	**974011120**	$15.00	**974011220**	$24.00	0° Front, Center, Back
	Accredited	**974011130**	$26.00	**974011230**	$44.00	0° Front, Center, Back 90° Front, Center, Back
2.0001" to 6.0000"	Calibration	**974012120**	$18.00	**974012220**	$24.00	0° Front, Center, Back
	Accredited	**974012130**	$30.00	**974012230**	$48.00	0° Front, Center, Back 90° Front, Center, Back

PROGRESSIVE & STEP GAGES

Range	Type of Certificate	Part No. New Gages	Price	Part No. Used Gages	Price	Number of Readings
.1050" to 4.5100"	Calibration	**974211120**	$28.00	**974211220**	$40.00	0° Front, Center, Back
	Accredited	**974211130**	$55.00	**974211230**	$70.00	0° Front, Center, Back 90° Front, Center, Back

Pricing is calculated for each gage member.

Readings for one (1) assembly are printed on one (1) certificate.

Cylindrical gages are calibrated at 10 Precision Lane, Swanton, VT 05488

Thread Certifications

VERMONT GAGE CALIBRATIONS

Vermont Gage is proud to offer ISO/IEC 17025 A2LA accredited certifications and non-accredited certifications for Threaded and Hexagon fixed limit gages. Our calibration lab meets or exceeds the dimensional, humidity and temperature requirements per ISO/IEC 17025 and ANSI/NCSL Z540.1. We encourage you to visit the A2LA website to view the scope of our accreditations for our labs

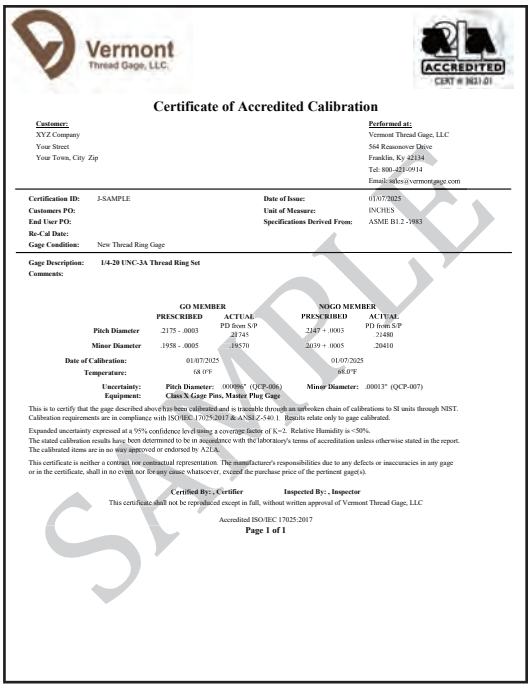

Vermont Thread Gage, LLC.

A2LA ACCREDITED CERT # 3821.01

Certificate of Accredited Calibration

Customer:
XYZ Company
Your Street
Your Town, City Zip

Performed at:
Vermont Thread Gage, LLC
564 Reasonover Drive
Franklin, Ky 42134
Tel: 800-421-0914
Email: sales@vermontgage.com

Certification ID: J-SAMPLE
Customers PO:
End User PO:
Re-Cal Date:
Gage Condition: New Thread Ring Gage
Date of Issue: 01/07/2025
Unit of Measure: INCHES
Specifications Derived From: ASME B1.2 -1983

Gage Description: **1/4-20 UNC-3A Thread Ring Set**
Comments:

	GO MEMBER PRESCRIBED	GO MEMBER ACTUAL	NOGO MEMBER PRESCRIBED	NOGO MEMBER ACTUAL
Pitch Diameter	.2175 - .0003	PD from S/P .21745	.2147 + .0003	PD from S/P .21480
Minor Diameter	.1958 - .0005	.19570	.2039 + .0005	.20410

Date of Calibration: 01/07/2025 01/07/2025
Temperature: 68.0°F 68.0°F

Uncertainty: **Pitch Diameter:** .000086" (QCP-006) **Minor Diameter:** .00013" (QCP-007)
Equipment: **Class X Gage Pins, Master Plug Gage**

This is to certify that the gage described above has been calibrated and is traceable through an unbroken chain of calibrations to SI units through NIST. Calibration requirements are in compliance with ISO/IEC 17025:2017 & ANSI Z-540.1. Results relate only to gage calibrated.

Expanded uncertainty expressed at a 95% confidence level using a coverage factor of K=2. Relative Humidity is <50%.
The stated calibration results have been determented to be in accordance with the laboratory's terms of accreditation unless otherwise stated in the report.
The calibrated items are in no way approved or endorsed by A2LA.

This certificate is neither a contract nor contractual representation. The manufacturer's responsibilities due to any defects or inaccuracies in any gage or in the certificate, shall in no event nor for any cause whatsoever, exceed the purchase price of the pertinent gage(s).

Certified By: , Certifier **Inspected By: , Inspector**

This certificate shall not be reproduced except in full, without written approval of Vermont Thread Gage, LLC

Accredited ISO/IEC 17025:2017
Page 1 of 1

SAMPLE

QUALITY POLICY FOR CALIBRATION LAB

The calibration lab of Vermont Thread Gage, LLC. is committed to achieving customer satisfaction by providing accurate calibrations, timely deliveries, and efficient customer services to the highest standards of quality. This is achieved by implementing and maintaining a quality system in compliance with the ISO/IEC 17025 standard, by maintaining good professional practices at all times and by continual improvement of this system.

To fulfill the needs of our customers, management shall ensure that these expectations are identified, assessed, and converted into requirements within the quality system. All laboratory personnel, including management and technicians, will be familiar with the established quality and operational procedures in their work.

This policy is implemented at VTGs Franklin, KY facility. The lab provides calibrations for product produced at this facility, as well as calibrations for gages supplied by our customers.

Certificate #3821.01
To view our Scope of Accreditation, go to:
http://www.a2la.org/scopepdf/3821-01.pdf

Thread Certifications

STRAIGHT THREAD PLUG GAGES

Range	Type of Certificate	Part No. New Gages	Price	Part No. Used Gages	Price	Number of Readings
#0 to 1.5000"	Calibration	**974511120**	$21.00	**974511220**	$35.00	2 OD, 3 PD
	Accredited	**974511130**	$33.00	**974511230**	$60.00	2 OD, 3 PD, 1 Lead, 2 Flank Angles
1.5001" to 4.0000"	Calibration	**974511140**	$24.00	**974511240**	$37.00	2 OD, 3 PD
	Accredited	**974511150**	$41.00	**974511250**	$68.00	2 OD, 3 PD, 1 Lead, 2 Flank Angles
4.0001" to 12.0000"	Calibration	**974511160**	$30.00	**974511260**	$45.00	2 OD, 3 PD
	Accredited	**974511170**	$44.00	**974511270**	$74.00	2 OD, 3 PD, 1 Lead, 2 Flank Angles

THREAD RING GAGES

Range	Type of Certificate	Part No. New Gages	Price	Part No. Used Gages	Price	Number of Readings
#0 - 1.5000" (Standard)	Calibration	**975511120**	$21.00	**975511220**	$34.00	New = PD from SP, ID
	Accredited	**975511130**	$33.00	**975511230**	$60.00	Used = PD from SP, ID as Found, ID as Left
#0 - 1.5000" (non-Standard)	Calibration	**975511140**	$24.00	**975511240**	$48.00	New = PD from SP, ID
	Accredited	**975511150**	$42.00	**975511250**	$80.00	Used = PD from SP, ID as Found, ID as Left
1.50001" to 4.0000"	Calibration	**975511160**	$30.00	**975511260**	$50.00	New = PD from SP, ID
	Accredited	**975511170**	$55.00	**975511270**	$94.00	Used = PD from SP, ID as Found, ID as Left
4.0001" to 12.0000"	Calibration	**975511180**	$42.00	**975511280**	$56.00	New = PD from SP, ID
	Accredited	**975511190**	$66.00	**975511290**	$112.00	Used = PD from SP, ID as Found, ID as Left

TAPERED PIPE THREAD PLUG GAGES

Range	Type of Certificate	Part No. New Gages	Price	Part No. Used Gages	Price	Number of Readings
1/16" to 2"	Calibration	**976011120**	$39.00	**976011220**	$52.00	OD, PD, Taper, Step Length.
	Accredited	**976011130**	$55.00	**976011230**	$70.00	OD, PD, Lead, 2 Flank Angles, Taper, Step Length
2 1/2" to 6"	Calibration	**976011140**	$44.00	**976011240**	$58.00	OD, PD, Taper, Step, Length.
	Accredited	**976011150**	$61.00	**976011250**	$80.00	OD, PD, Lead, 2 Flank Angles, Taper, Step Length

TAPERED PIPE THREAD RING GAGES

Range	Type of Certificate	Part No. New Gages	Price	Part No. Used Gages	Price	Number of Readings
1/16" to 2"	Calibration	**976511120**	$39.00	**976511220**	$70.00	PD & ID at Large End, Length
	Accredited	**976511130**	$55.00	**976511230**	$90.00	PD & ID at Large End, Length
2 1/2" to 6"	Calibration	**976511140**	$44.00	**976511240**	$74.00	PD & ID at Large End, Length
	Accredited	**976511150**	$62.00	**976511250**	$94.00	PD & ID at Large End, Length

THREAD MEASURING WIRES & GEAR WIRES

Range	Type of Certificate	Part No. New Gages	Price	Part No. Used Gages	Price	Number of Readings
All	Calibration	**975011130**	$33.00	**975011230**	$50.00	Average Ø, Constant (60° Only)

HEX GAGES

Range	Type of Certificate	Part No. New Gages	Price	Part No. Used Gages	Price	Number of Readings
.0280" to 3.0000"	Calibration	**974411120**	$27.50	**974411220**	$45.00	Based on Diameter, Length, and Style. Please
	Accredited	**974411130**	$55.00	**974411230**	$90.00	contact customer service for more information

Pricing is calculated for each gage member.

Readings for one (1) assembly are printed on one (1) certificate.

Threaded gages are calibrated at 564 Reasonover Drive, Franklin, KY 42134

Measurement Conflict Resolution

VERMONT GAGE HAS ADOPTED THE MEASUREMENT DISPUTE RESOLUTION METHODS ENDORSED BY THE AMTMA.

"Disputes over measurements can be costly for both parties to resolve and may hinder ongoing relations between suppliers and users of gages and instruments. Often it is simpler for both parties to agree to accept an average value of their readings as the final 'size' or the point at which their readings plus measurements uncertainties overlap.

The obvious way to avoid such problems is to agree beforehand on a method that will be used to resolve them if they arise. Often, the degree of separation between the readings dictate the best approach to take. Where the uncertainty of each party is significantly different, the party with the lowest uncertainty in the calibration would be considered more reliable.

The AMTMA offers the following methods as options you can choose from. If the Referee Method fails to bring a resolution, then the Universal Standard Method should be used due to the fact it is technically based and internationally accepted by metrologists in all disciplines."

THE REFEREE METHOD

The two parties agree on a third party to provide a referee measurement that it is agreed will be considered as the actual value. An alternative on this is where the reading by either party that is closest to that provided by the referee is considered the acceptable value.

Other variations of this method include averaging the readings of three or more laboratories and may also include the readings produced by the parties to the dispute.

Unless otherwise agreed to, the cost of using outside laboratories in this method are paid by the losing party.

THE UNIVERSAL STANDARD METHOD

National and international standards agencies have produced methods of resolving measurement disputes that focus on the uncertainty budgets of those that have produced the measurements. The advantage of this method is that its technical base tends to remove personalities from the equation and may indicate that neither party to a dispute has the capability required to resolve it.

Using this method, the onus of proving a measurement falls on the party that has questioned the results of calibration. If requested, this party must provide a copy of their uncertainty budget for the measurement to the other party for review. Budgets from both parties should be compared. Such a review should focus on seeking agreement between both parties respecting each element included in the budget since it will rarely, if ever, be all right or all wrong. The mathematics should take care of the rest. There may be cases where one or more elements have not been included in the budget and when they are, the outcome changes significantly.

In the event one or more assumptions in the budget cannot be resolved, a third party can be asked to provide an opinion on them."

Taken from the AMTMA "White Paper on Resolving Conflict Disputes". For more information on AMTMA, visit www.amtma.com.

Depth Notches & Pressure Relief Flats

DEPTH NOTCHES

Gage hole diameter and depth.
Depth notches can be added to reversible cylindrical style gages to gage hole depth as well as diameter. Length tolerances from .0005". Available on plug gage sizes .050" diameter and larger.

Contact Customer Service for pricing.

Dimensions	
A	Gage Diameter
L1	Go Depth Notch
L2	NoGo Depth Notch
T	Depth Tolerance

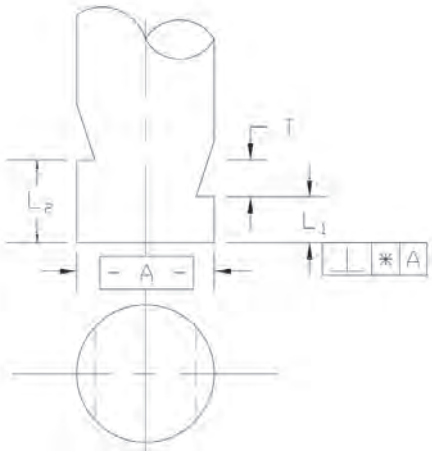

PRESSURE RELIEF FLATS

Allows air or fluid to escape.
Pressure relief flats can be added to reversible cylindrical style gages to allow air or fluid to escape when gaging blind holes. Depth of flat is .010" to .015".

Contact Customer Service for pricing.
Excludes XX tolerance.

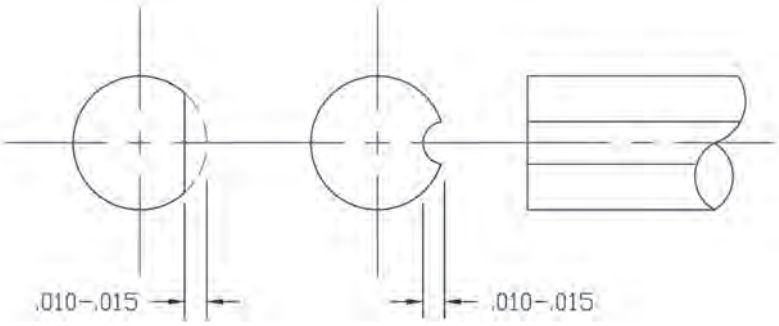

DIAMOND & BLADE NO-GO GAGE

Used to inspect holes for out of round condition.

Applied to the No-Go gage pin (max hole diameter).

An out of round hole may pass a round gage pin. (The full diameter No-Go will not enter.)

By reducing the diameter contacting only 1/3 of the hole diameter, the inspector can rotate the gage to locate oversize areas of a hole at min material condition.

Contact Customer Service for pricing.

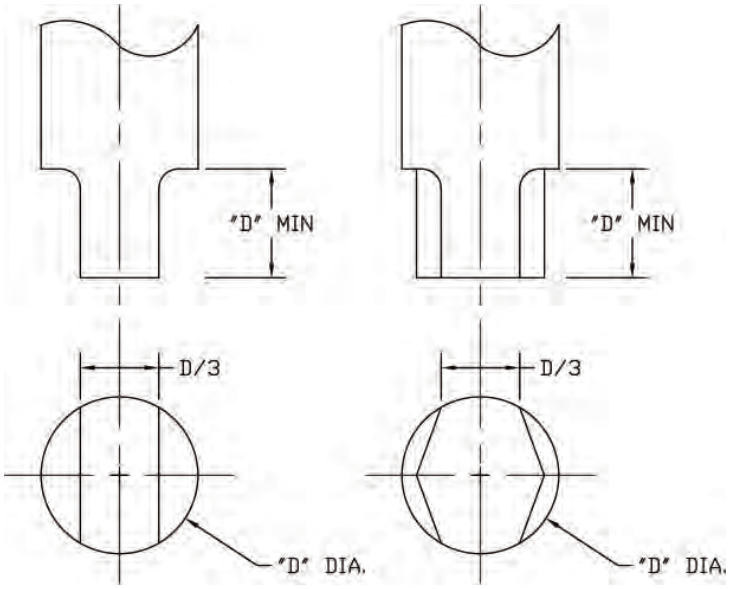

Gage Use & Helpful Hints

NPT PIPE THREAD GAGE INSTRUCTIONS

NPT Product Inspection Tolerance Examples.

View full article at: *www.vermontgage.com/support*

(See ASME B1.20.1-2013 for further information.)

NPT L1 PIPE THREAD PLUG GAGES:

NPT L_1 thread plug gages have a Basic notch ground to the E_1 pitch diameter at the L_1 length. The internal part thread is considered in tolerance if the notch on the gage is within +/- 1 turn from the face (Flush) of the part thread.

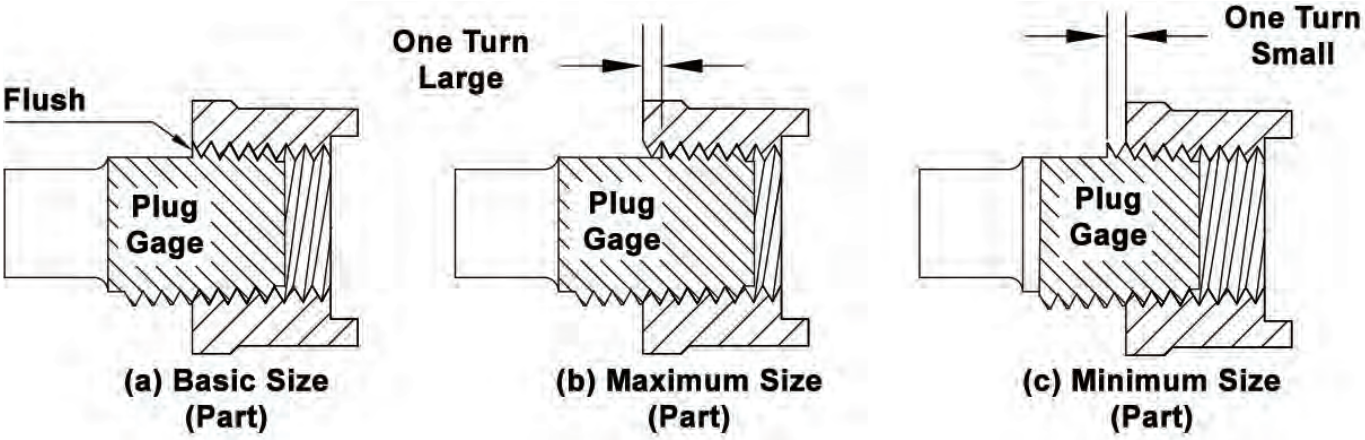

NPT L1 PIPE THREAD RING GAGES:

NPT L_1 thread ring gages do not have a notch. The thickness of the ring equals the L1 Basic length. The large end of the ring equals the E1 pitch diameter. The external part thread is considered in tolerance if the small end face of the NPT L1 ring gage is within +/-1 turn of the small end of the part thread.

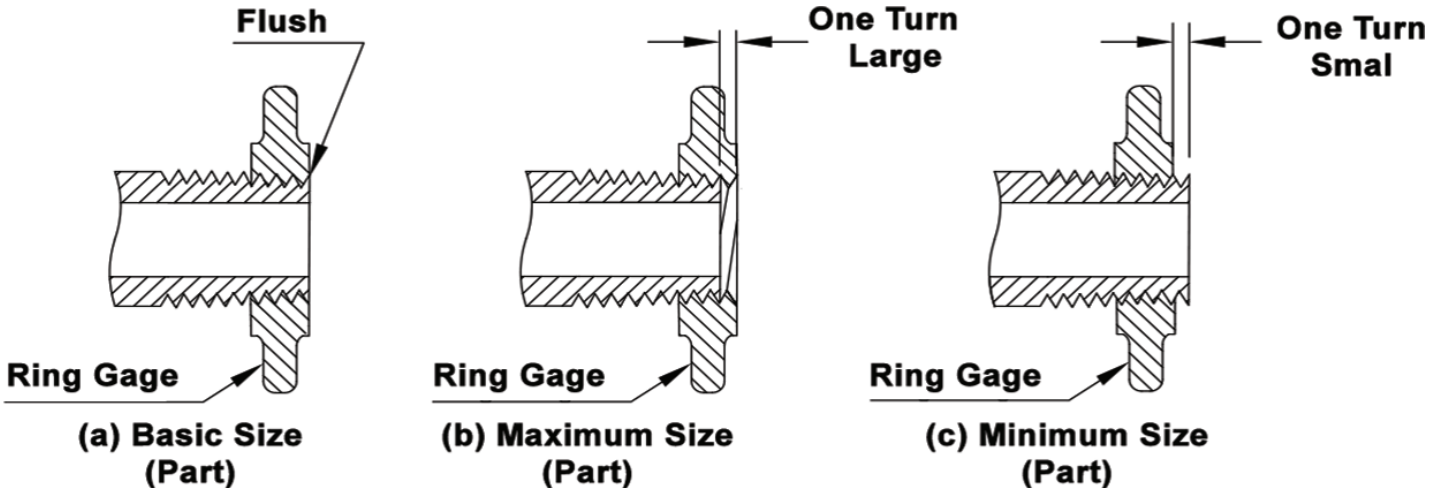

Gage Use & Helpful Hints

DRYSEAL PIPE THREAD GAGE SELECTION CHART

(See ASME B1.20.5-1991 for further information.)

ASME B1.20.5 - 1991 **TABLE 1 Gages and Tolerances**

Thread to be Gaged	Gaged With	Product Thread Tolerance Applied to the Basic Size [Note (1)]		Limit Method of Gaging [Note (1)] Tolerance
NPTF, External	L_1 or L_1 Short and [Note (2)] L_2 or L_2 short ring gages	Plus (small) 1 turn	Minus (large) 1 turn	Threads are within the allowable tolerance when the product reference point is on or between the maximum and minimum step of the L_1 gage.
PTF-SAE SHORT, External		Plus (small) 0 turn	Minus (large) 1.5 turn	
NPTF, Internal	L_1 or L_1 Short and [Note (3)] L_3 or L_3 short plug gages	Plus (large) 1 turn	Minus (small) 1 turn	
PTF-SAE SHORT, Internal		Plus (large) 0 turn	Minus (small) 1.5 turn	
NPSF, Internal	L_1 or L_1 Short plug gage	Plus (large) 0 turn	Minus (small) 1.5 turn	
NPSI, Internal		Plus (large) 1 turn	Minus (small) 0.5 turn	

Notes:

(1) Step limit gages with 4 (or 3) steps should be used.

(2) The difference in engagement of the L_1 versus the L_2 ring gages shall not exceed 0.5 turn. See para. 1.8.4.

(3) The difference in engagement of the L_1 versus the L_3 plug gages shall not exceed 0.5 turn. See para. 1.8.4.

Industry Note:

Gage customers usually prefer to measure Dryseal Straight Pipe Threads (NPSF, NPSI, ...) with Go & No Go straight (parallel) plug gages. Go & No-Go Plug gages may be used but, the parts must pass the NPTF L_1 Plug gage per ASME B1.20.5.

Gage Fact Sheet

What are Gages used for?

Fixed limit gages are primarily used to check dimensions and geometries; plug gages check internal and ring gages external dimensions and geometries. They effectively ensure that a part being measured is within its designed tolerance limits. Fixed limit gages are highly accurate, economical and easy to use.

Principles of Go/NoGo Gaging

To use as a "Go/NoGo" functional check, try and fit both the "Go" and "NoGo" gages into or onto a part being measured. The measured part passes if the "Go" gage fits and the "NoGo" doesn't, otherwise the part fails. A "Go/NoGo" check is strictly a pass/fail test. The actual part size is never measured.

Types of Fixed Limit Gages

Plug gages are available in two types, plain cylindrical and thread, and in several popular styles: reversible, taperlock and trilock. Style is usually determined by the size of the gage. Ring gages are also available as plain cylindrical and thread type gages.

Wear Resistance and Tolerance

Gages are available in tool steel, Black Guard™, chrome plate, and carbide. Chrome plate and carbide are harder and therefore provide additional wear resistance. A choice of tolerance is also available. See chart for explanation of Gagemaker's tolerances.

Calculate Gage Tolerance

Normal practice for determining gage tolerance is to allow 10% of product tolerance to be divided between the "Go" and "NoGo" gages. For plug gages "Go" is normally a plus tolerance and "NoGo" a minus tolerance. For ring gages the opposite is true; "Go" is normally a minus tolerance and "NoGo" a plus tolerance.

Using this practice as a guideline, gage tolerance is always included in the part tolerance and accounts for up to 10%. This means that 10% of good product could potentially fail the inspection but that no bad product would ever pass!

GAGEMAKER'S TOLERANCE CHART (ASME B89.1.5)

Diameter Range	XXX	XX	X	Y	Z	ZZ
Above - Including			Inch			
.010" - .825"	.000010"	.000020"	.000040"	.000070"	.0001"	.0002"
.825" - 1.510"	.000015"	.000030"	.000060"	.000090"	.00012"	.00024"
1.510" - 2.510"	.000020"	.000040"	.000080"	.00012"	.00016"	.00032"
2.510" - 4.510"	.000025"	.000050"	.0001"	.00015"	.0002"	.0004"
4.510" - 6.510"	.000033"	.000065"	.00013"	.00019"	.00025"	.0005"
6.510" - 9.010"	.000040"	.000080"	.00016"	.00024"	.00032"	.00064"
9.010" - 12.010"	.000050"	.0001"	.0002"	.0003"	.0004"	.0008"
			Metric			
.254mm - 20.96mm	.00025mm	.00051mm	.00102mm	.00178mm	.00254mm	.00508mm
20.96mm - 38.35mm	.00038mm	.00076mm	.00152mm	.00229mm	.00305mm	.00610mm
38.35mm - 63.75mm	.00051mm	.00102mm	.00203mm	.00305mm	.00406mm	.00813mm
63.75mm - 114.55mm	.00064mm	.00127mm	.00254mm	.00381mm	.00508mm	.01016mm
114.55mm - 165.35mm	.00084mm	.00165mm	.00330mm	.00483mm	.00635mm	.01270mm
165.35mm - 228.85mm	.00102mm	.00203mm	.00406mm	.00610mm	.00813mm	.01626mm
228.85mm - 305.05mm	.00127mm	.00254mm	.00508mm	.00762mm	.01016mm	.02032mm

Care and Use of Gages

1.) Dimensions to be gaged must be cleaned and free from burrs to prevent gaging interference.

2.) Gage should be turned slowly into or onto the part being checked. The fit should be snug but not forced. Air flats on a "Go" gage can facilitate the inspection of blind holes where air pressure is a problem.

3.) Temperature of the gage and the part should be the same. This is because of the effects of thermal expansion on material. The normal temperature at which gages are calibrated is 68 degrees Fahrenheit. This is therefore the best temperature at which both part and gage should be when inspected. This effectively eliminates any error due to thermal expansion.

4.) Gages should be protected from exposure to excessive heat, moisture, and corrosive chemicals. After use, gages should be cleaned and then coated with a thin-film rust preventative and stored properly.

5.) Gages should be periodically calibrated to ensure accuracy. Gages and "Go" gages in particular, will wear with normal use and require recalibration. Frequency of calibration is dependent on such factors as frequency of use, part abrasiveness, tolerance, and applicable quality procedures. All gages should be monitored and maintained accordingly.

QUALITY YOU DESERVE

VERMONT GAGE CUSTOM SETS

- Be more efficient with Vermont Gage Custom Sets.
- Class X over under sets on demand!
- Store your Taperlocks, Trilocks, Rings, and Threads!
- Closed cell foam ensures a tight fit and safe travel.
- Perfect for reoccurring jobs.
- Buy only the gages you need.
- Personalize your set with laser markings.
- Convenience and precision that meet your needs.
- Boxes available in two sizes.
- Customize your set for quick access to the gages you need.

See page 10-11 for more information.

Call 1.800.421.0914 to order

www.vermontgage.com

Vermont Gage

Vermont Gage

A Division of Vermont Precision Tools, Inc.

Main Manufacturing Facility
10 Precision Lane
Swanton, VT 05488

Threads Manufacturing Facility
Vermont Thread Gage, LLC
Franklin, KY 42134

p: 800.421.0914 e: sales@vermontgage.com
www.vermontgage.com

ISA

CATALOG # 961032025